Merlin®

CHOOSE SAFETY · CHOOSE MERLIN

gomerlin.com.au

gomerlin.co.nz

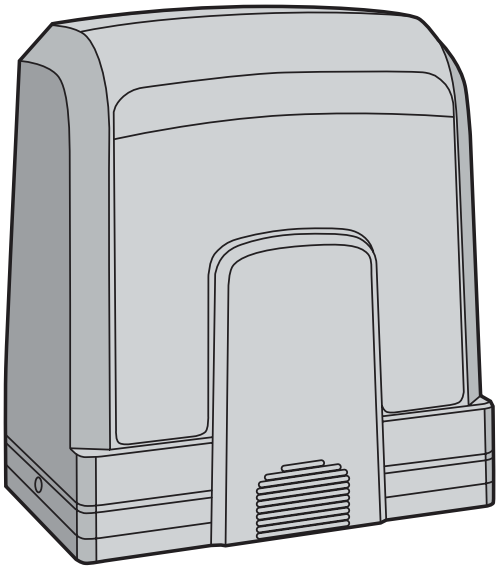

battery backup compatible

myQ® capable

Slide 600

MGSK600 & MGSK600-LV

Slide Gate Opener

Installation and Operating Instructions

Visit the Slide 600 landing pages for:

- Product features
- Purchase compatible accessories
- Handy tips & how-to videos
- Digital copy of this manual
- Register your warranty

Owners Copy: SAVE THESE INSTRUCTIONS for future reference

This manual contains IMPORTANT SAFETY information
DO NOT PROCEED WITH THE INSTALLATION BEFORE READING THOROUGHLY

SAFETY INSTRUCTIONS

WARNING!

START BY READING THESE IMPORTANT SAFETY INSTRUCTIONS

- Failure to comply with the following instructions may result in serious personal injury or property damage.
- Read and follow all instructions carefully.
- The gate opener is designed and tested to offer safe service, provided it is installed and operated in strict accordance with the instructions in this manual.

About this Manual

These instructions are the original operating instructions according to the AS/NZS 60335.1 in conjunction with AS/NZS 60335.2.103. The instruction manual must be read carefully to understand important product information. Pay attention to the safety and warning notices.
Keep the instructions in a safe place and make sure that they can be viewed by the user at all times. Keep the manual for future reference and to make it available to all persons for inspection, service, maintenance and repair. After installation pass the complete documentation to the owner.
After installation and programming, all users must be instructed in the function and operation of the gate opener for correct and safe operation.
Before first use and based on the standard requirements the installer must inspect gates regarding their safe condition.

Before you begin the installation:

This product must be installed by a professional installer.

The installer must understand the following:

- The operation of the drive and potential hazards
- The operation of the manual emergency release mechanism
- The regular maintenance, inspection and care according to the Standards
- The installer must instruct other uses on the safe operation of the gate opener

Please read the operating instructions and especially the precautions. The following symbols are placed in front of instructions to avoid personal injury or damage to property. Read these instructions carefully.

Warning Symbols

The general warning symbol indicates a danger that can lead to injuries or death. In the text section, the general warning symbols are used as described below.

DANGER Symbol	WARNING Symbol	CAUTION Symbol	ATTENTION Symbol
⚠ DANGER	⚠ WARNING	⚠ CAUTION	ATTENTION
Indicates an imminent hazardous situation which, if not avoided, will result in death or serious injury.	Indicates a potentially hazardous situation which, if not avoided, could result in death or serious injury.	Indicates a potentially hazardous situation which, if not avoided, could result in minor or moderate injury.	Indicates practices not related to personal injury.

Intended Use

The gate opener is exclusively designed and tested for the operation of smooth-running residential gates.

The maximum permissible gate size and the maximum weight must not be exceeded. The gate must open and close smoothly by hand. Use the opener on gates which comply with the applicable standards and guidelines. Regional conditions of wind loads must be taken into account when using door or gate panels. Observe the manufacturer's specifications regarding the combination of gate and opener. Possible hazards within the meaning of AS/NZS 60335.1 in conjunction with AS/NZS 60335.2.103 are to be avoided by designing and installing the gate according to the relevant instructions. This gate mechanism must be installed and operated in accordance with the appropriate safety rules.

Improper Use

The construction of the gate opener is not designed for the operation of heavy-duty gates. It is not permitted on gates that travel with incline/decline.

Any improper use of the gate opener could increase the risk of accidents. The manufacturer assumes no liability for such usage. With this gate opener, automated gates must comply with the current, valid local standards, guidelines and regulations, AS/NZS 60335.1 in conjunction with AS/NZS 60335.2.103.

Only Merlin genuine and approved accessories may be connected to the gate opener. Incorrect installation and/or failure to comply with the following instructions may result in serious personal injury or damage to property.

SAFETY INSTRUCTIONS

During operation, the gate should not under any circumstances obstruct public path ways and roads (public area). When using tools and small parts to install or carry out repair work on a gate, exercise caution and do not wear rings, watches or loose clothing.

To avoid serious personal injury due to entrapments, remove any locking device fitted to the gate in order to prevent damage to the gate.

Installation and wiring must be in compliance with your local building and electrical installation regulations. Power cables must only be connected to a properly earthed supply.

Disconnect electric power to the system before installation, maintenance, repairs or removing covers. A dual pole isolating switch must be provided to the mains power supply (permanently-wired installation) to guarantee all-pole disconnection (isolating switch or by a separate fuse). The repairs and electrical installations may be performed only by an authorized electrician. Emergency Stop Button must be installed for emergency case based on the risk assessment.

Any possible entrapment caused by the moving gate leaf(s) between gate & walls must be eliminated by respecting the given safety distances in accordance with the AS/NZS 60335.1 in conjunction with AS/NZS 60335.2.103 and/or with safety devices (e.g. safe edge).

Testing of the safety function of the drive system is recommended to be carried out at least once a month. Refer also to manufacturers instruction of the gate system components.

After the installation a final test of the full function of the system and the safety devices must be made.

After installation and commissioning, all users must be instructed in the function and operation of the slide gate opener.

It is important to make sure that the gate always runs smoothly. Gates which stick or jam must be repaired immediately. Employ a qualified technician to repair the gate, never attempt to repair it yourself. This device is not intended for use by persons (including children) with restricted physical, sensory or mental abilities or lack of experience or knowledge, unless they are supervised by a person responsible for their safety or have received instruction in how to use the device. If necessary, control equipment MUST be mounted within sight of the gate and out of reach of children. Children should be supervised to ensure that they do not play with the device. Do not allow children to operate push button(s) or remote(s). Misuse of the gate opener system can result in serious injury.

CONTENTS

SAFETY INSTRUCTIONS 2-3

INTRODUCTION 5-7

Specifications 5
Sales Kit Inventory 5
Tools Needed 6
Overview of Gate Operator 6
Planning 7-10

INSTALLATION 11-13

Installing the Base Mounting Plate 11
Disengagement of the Manual Release 11
Installing the Opener on the Base Mounting Plate 12
Gate Rack Mounting 12
Installing the Limit Switch Brackets 13

WIRING 14-17

Electrical Safety 14
Commissionaing the Gate Opener 14
Access to the Control Board and Motor Connection 15
Wiring Diagram 16
Install Entrapment Protection Devices 17
Connect a Battery Backup to the Control Box (Optional) 17

PROGRAMMING 18-20

LCD Screen Menu 18
Programming Overview 18-19
Initial Setup 20

BASIC SETTINGS 21-26

Limit and Force Learning 21
Remote Control Behaviour 21
IR Behaviour 21
Input Command 22
Pedestrian Command 22
Delay Motor 2 in Open and Close Direction 22-23
Timer To Close (TTC) 23
Reversal Time 24
E-Lock & Ram Blow Motor 1 for E-Lock 24-25
Flashing Light - Pre-Flashing 25
Special Contact 26
Soft & Hard Stop in Open and Close Direction 26
Maintenance Counter 26

ADVANCED SETTINGS 27-30

Password 27
Force Motors 1 & 2 Open and Close (Password Protected) 28
Speed Motors 1 & 2 in Open and Close Direction (Password Protected) 29
Soft-Stop Speed in Open and Close Direction (Password Protected) 29

FACTORY RESET 30

WIRELESS PROGRAMMING 31-33

Remote Control Programming 31
MyQ Set-up 32-34

OPERATION AND MAINTENANCE 35-37

Error Codes 35-36
Accessories and Gate Hardware 37

PROGRAMMING FLOW CHART 38-42

CHAMBERLAIN LIMITED WARRANTY 43-44

1 SPECIFICATIONS – SLIDE 600 – MGSK600 / MGSK600-LV

Main AC Supply:……220-240 Vac; 50/60 Hz
Motor Voltage: ……24 Vdc
Input Power: ……120 W
Ambient Temperature Range: ……-20 ~ +55˚C
Maximum Weight for single Gate Leaf:…… 600 Kg
Maximum Width for single Gate Leaf:……8 m
Maximum Pull Force:……18 Nm
Running Time: ……5 minutes
Ingress Protection:……IP 44 Suitable for outdoor installation
Maximum Travel Speed .....……31 cm/s
Gate Opener Weight:……9 kg
Transmitter Frequency: ……433.30 MHz/ 433.92 MHz/ 434.54 MHz
Memory registers:……64 handset codes (max. 4 keypad devices - 1 code each.)

Dimensions
Gate Opener Height:……304 mm
Gate Opener Width:……270 mm
Gate Opener Depth:……218 mm

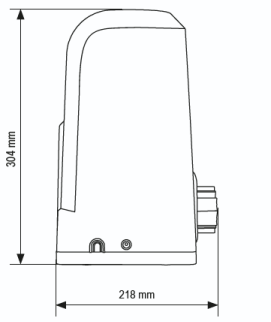

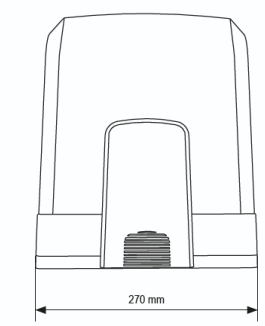

2 SALES KIT INVENTORY - MGSK600 MAINS VOLTAGE 240V OR MGSK600-LV LOW VOLTAGE 24V

Your gate opener is packed in separate cartons. The Slide 600 MGSK600 or MGSK600-LV opener sales kit contains the opener, its hardware, accessories, four metres of rack and a transformer MGTR1-96VA (only for the MGSK600-LV sales kit).

(1) Opener (MGS600)
(2) 4 x Slide Gate Rack 1m (MGS-RACK)
(3) Instruction Manual
(4) 2 x Release Keys
(5) 4 x M8x80 Masonry Anchors
(6) 4 x M8x40 Bolts with nuts & washers
(7) Base Mounting Plate
(8) 2 x Four Button Remote Control (E970M)
(9) 2 x Limit Switch Brackets
(10) Quick Reference Guide
(11) Gate Transformer 240-24V 96VA (MGTR1-96VA)
NOTE: Only for low voltage MGSK600-LV sales kit.

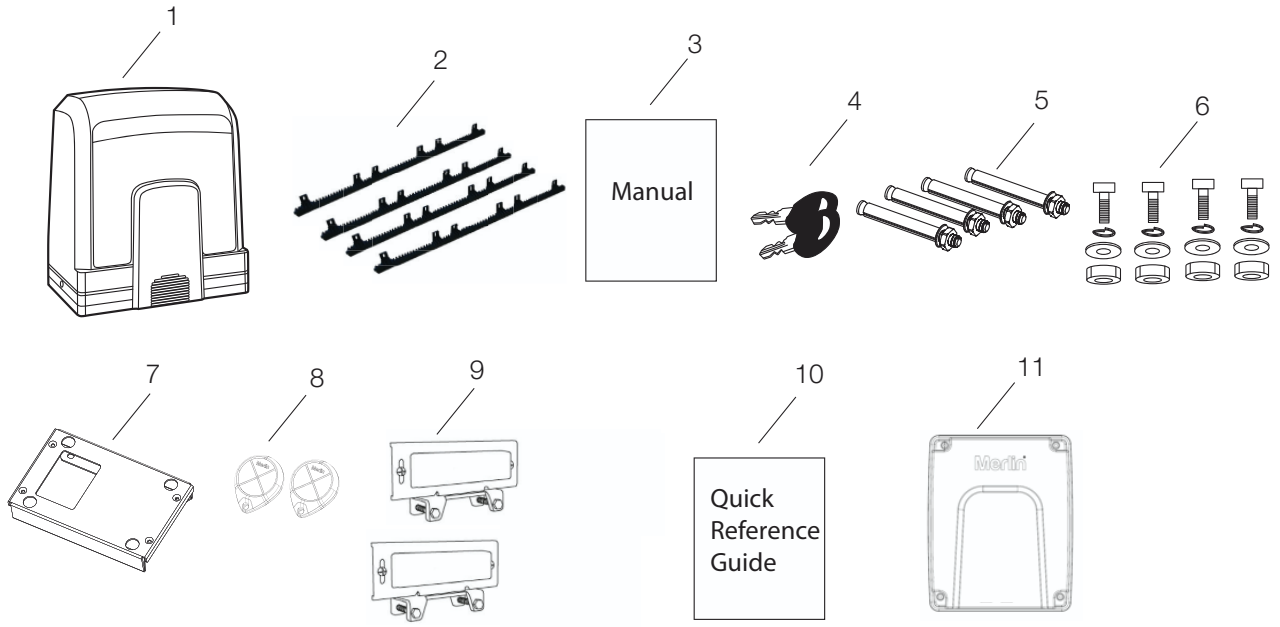

3 TOOLS NEEDED

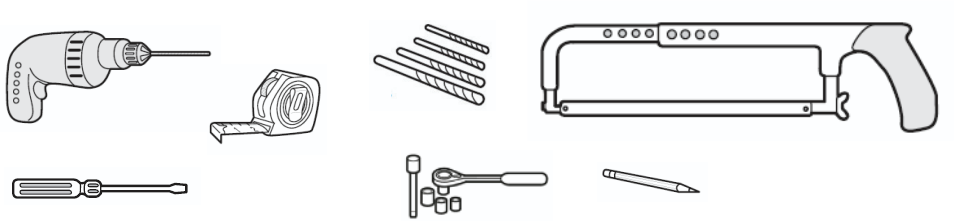

4 OVERVIEW OF THE GATE OPENER

MGSK600 – MAINS VOLTAGE SLIDE GATE OPENER INSTALL OR
MGSK600-LV – LOW VOLTAGE SLIDE GATE OPENER INSTALL

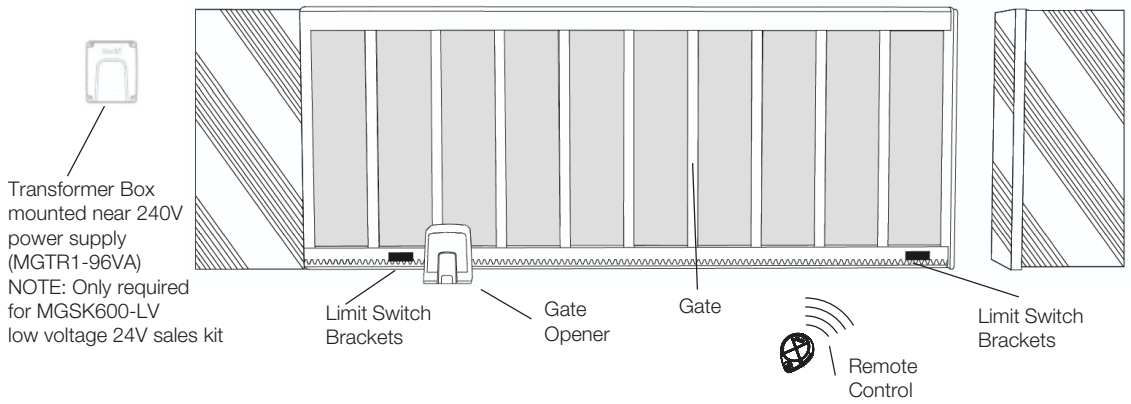

5 INSTALLING THE WARNING LABELS

2 x Warning Labels are provided with each sales kit (MGS600 & MGS600-LV). Both warning labels must be placed; one on the inside of the post and the other on the outside of the post.

MGSK600 – MAINS VOLTAGE SLIDE GATE OPENER INSTALL OR
MGSK600-LV – LOW VOLTAGE SLIDE GATE OPENER INSTALL

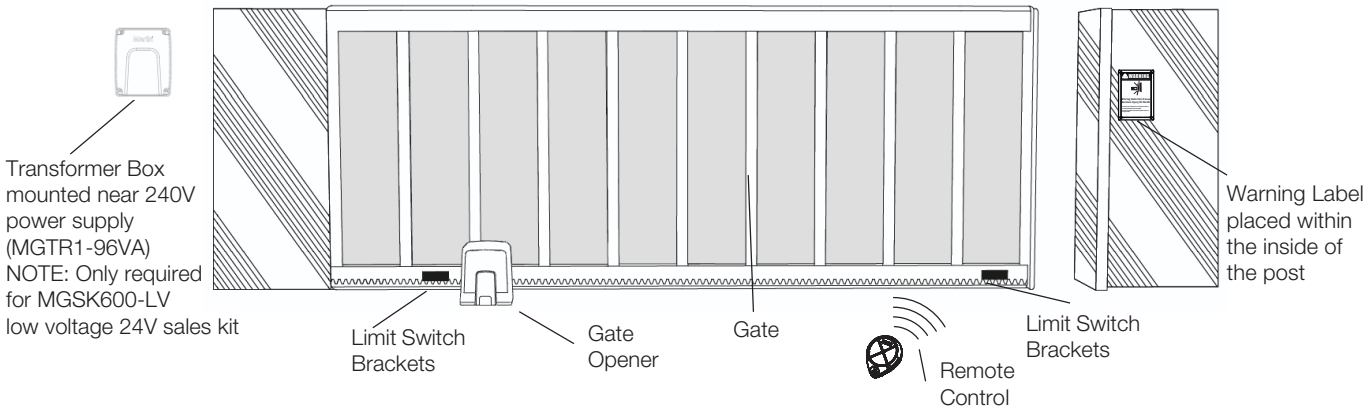

Before installing the gate opener, ensure that the gate is opening smoothly. Ensure that all the required cables (power cable, accessory cables etc) are prepared and laid correctly.

NOTE: All crushing points must be secured by an entrapment protection according to AS/NZS 60335.1 in conjunction with AS/NZS 60335.2.103.

6 PLANNING

Wind Load Rating for Slide Gate Operators

We do not have wind load ratings on our gate openers, as Chamberlain is not responsible for how gate installers design their gates.

Recommendations

- Do not use a solid leaf/panel gate in windy areas.
- Use a light weight picketed slide or swing gate to minimize the wind force.
- Try using a maglock or e-lock to keep the gate securely shut.
- It may be needed to hold the gate(s) open or close, in windy applications.
- When selecting an opener, be sure to select the correct opener for the size of gate.
- You may need to adjust the gate force margins in high wind applications.

Power Wiring

1. The 240V AC opener is supplied with a mains power plug pre-assembled ready for installation. This may require mains power supply to be provided close to the opener by a licensed electrician.
2. The 24V AC opener will require a low-voltage power supply from the transformer box (MGTR1-96VA) to the gate opener.
3. The recommended cable sizes for the connection between the transformer box and The Low Voltage (LV) openers:
   - Flexible 3 core cable:
   - Less than 20m, minimum 1.5mm^2
   - 20m to 50m, minimum 2.5mm^2
   - 50m to 100m, minimum 4mm^2
4. It is recommended that the Low Voltage (LV) power cable is run inside conduit to the opener as per local installation requirements. Suitable cable glands must be used that provide sufficient cable restraint against a minimum of 30 N pull force.

Earthing Recommendations

Proper earthing of the operator is recommended to improve the radio range of transmitters and wireless accessories.

- The 240V AC unit is earthed using the standard AC power plug provided
- For the Low Voltage unit earthing can be achieved by running an earth wire back to the transformer box
- Alternatively connect the earth wire supplied with the LV unit to a suitable earth point on the operator base plate
- The use of an extension antenna kit SWG-ANT-EV may also be used to improve the radio range.

Additional Accessories

The vehicle loops allow the gate to stay open when vehicles are obstructing the gate path. Suggested for vehicles 4.2m or longer. Vehicle loops are not required but are recommended. Before installing any accessories be sure to complete a site check to determine the best device(s) the site needs.

6 PLANNING CONTINUED

GATE OPENER

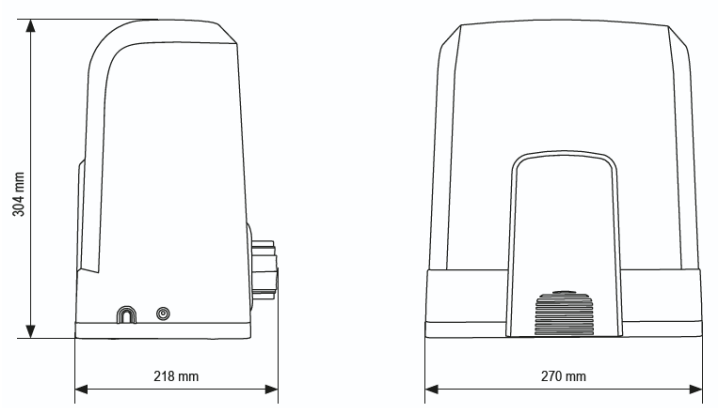

Maximum Gate Weight	600kg
Maximum Gate Width	8m

Conduit and Concrete Pad

Trench and install conduit. Before trenching, contact underground utility authorities. Conduit must be approved for low and mains voltage. Consider the opener placement BEFORE installing the pad or post.

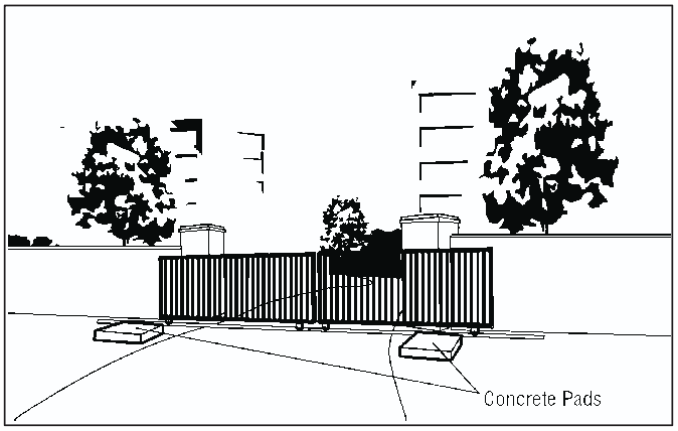

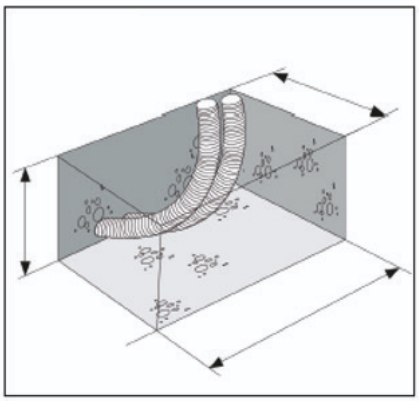

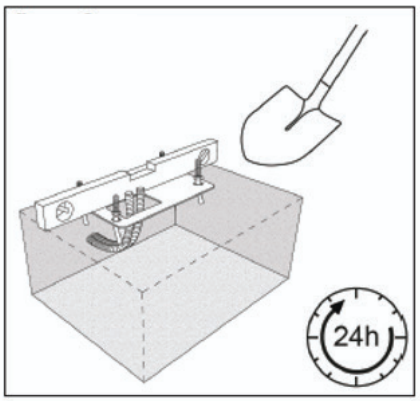

6 PLANNING CONTINUED

Safety

Safety entrapment protection devices are recommended to protect against any entrapment or safety conditions encountered in your gate application. Install the two warning signs provided on the inside and outside of the property, where easily visible.

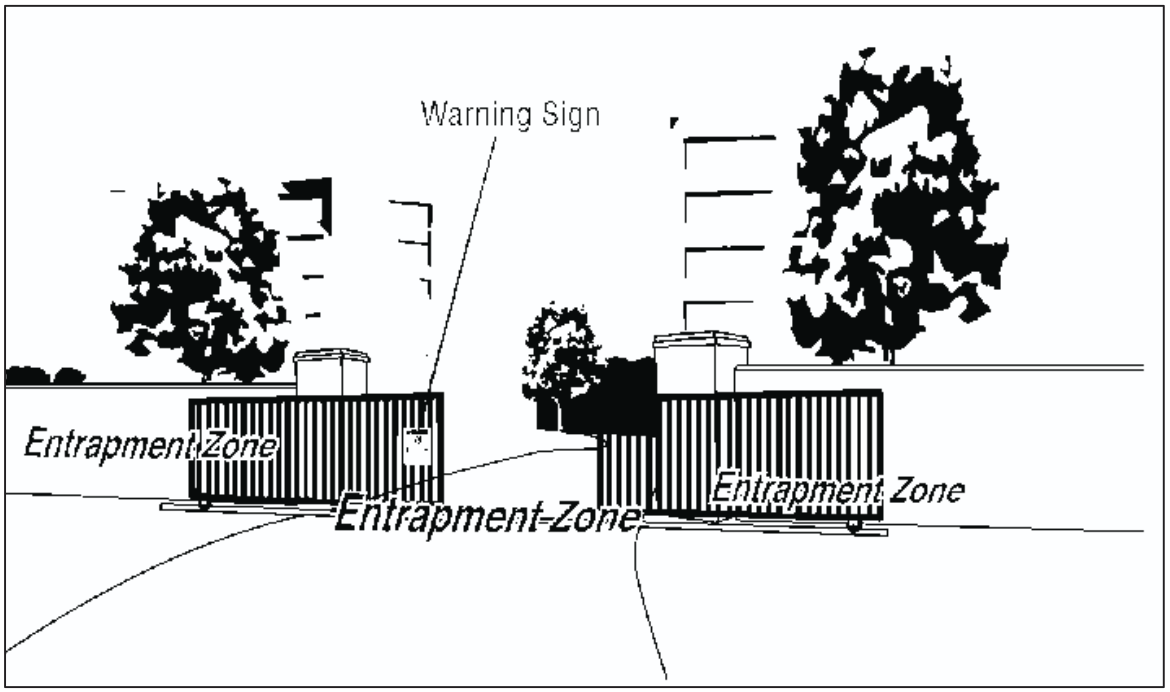

Safety Catch Rollers

Install catch rollers with safety covers on the side of a post or wall with a minimal distance of approximately 1.2cm between the rollers and gate.

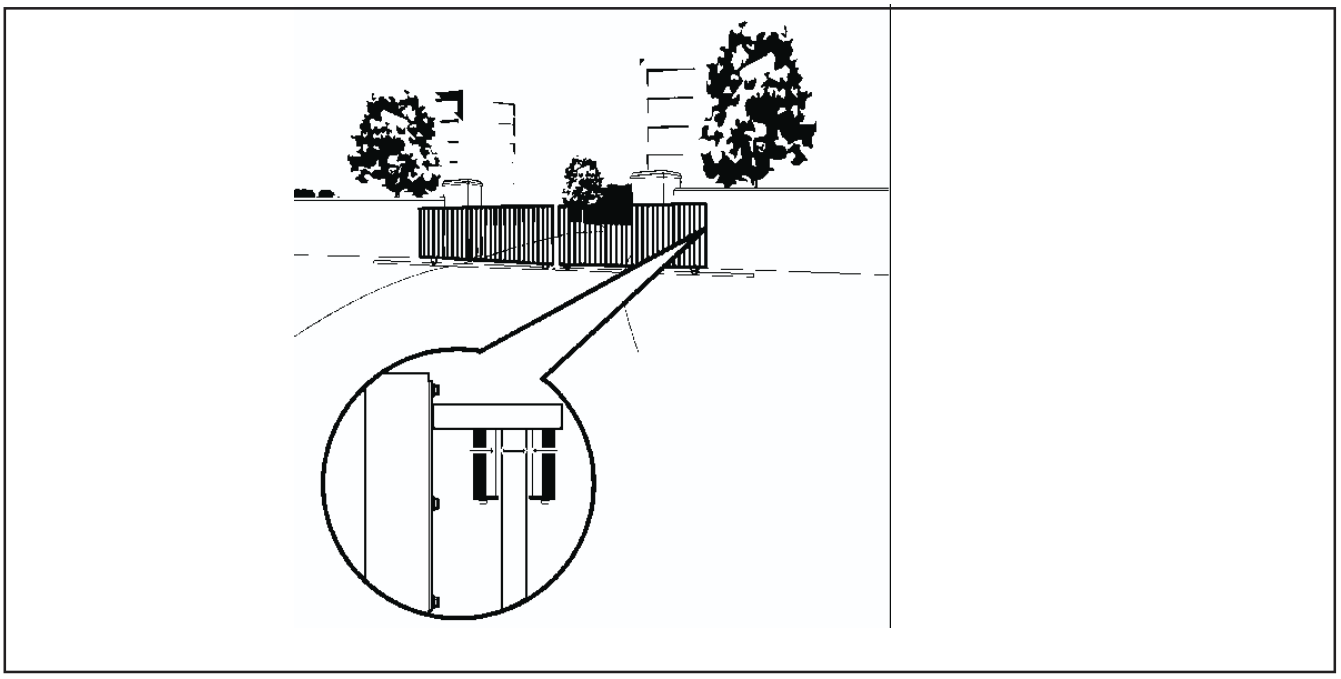

6 PLANNING CONTINUED

Base Mounting Plate Position

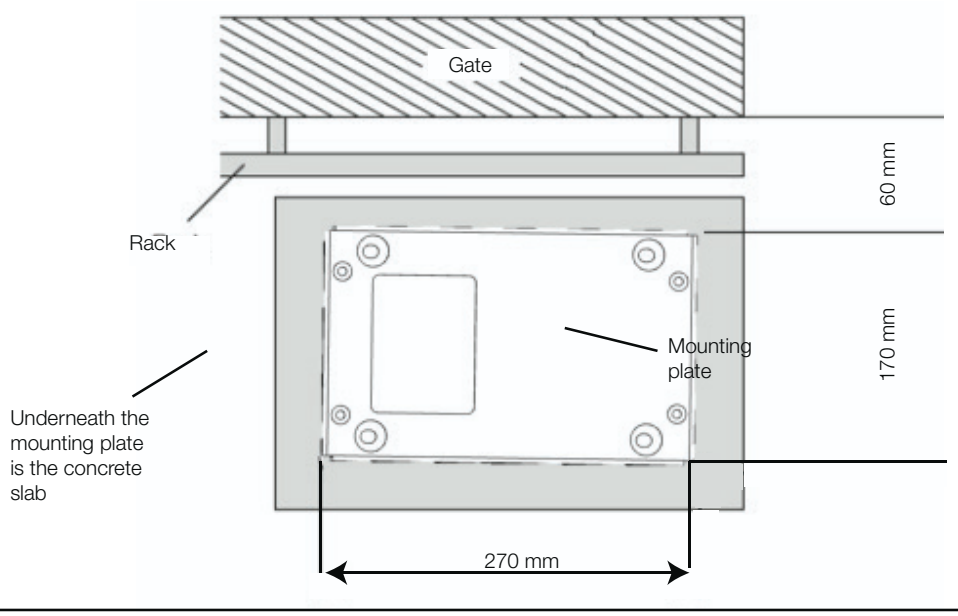

Base Mounting Plate

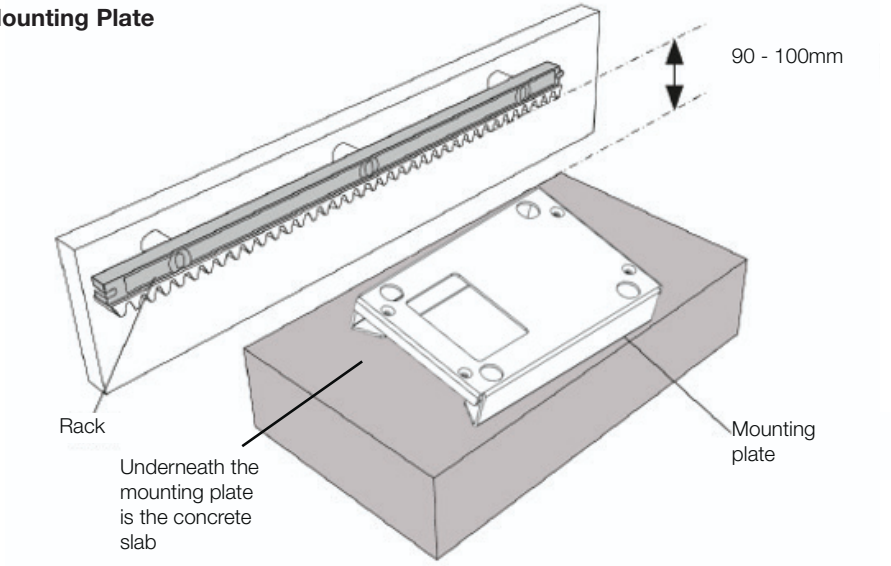

Rack

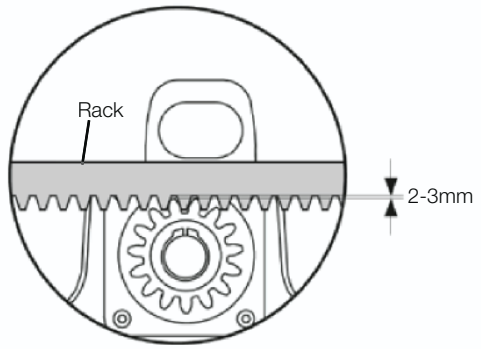

Limit Switch Brackets

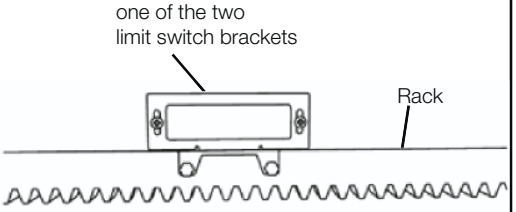

7 INSTALLING THE BASE MOUNTING PLATE

1. Position the base mounting plate as required, referring to the planning section (figure 1).
2. Mark and drill the four masonry anchor holes (figure 2).

NOTE: Position the power cord through the base mounting plate before mounting the base plate.

3. Mount the base mounting plate to the ground or concrete pad using the four masonry anchors provided.

NOTE: Ensure the base mounting plate is orientated in the correct way. The arrow on the base mounting plate needs to be set towards the gate.

figure 1

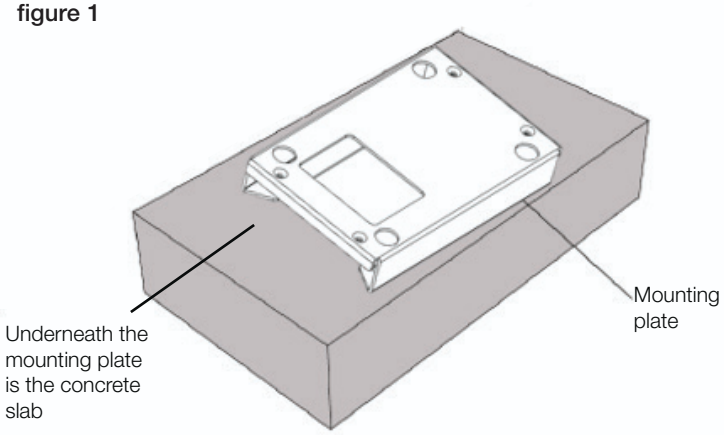

figure 2

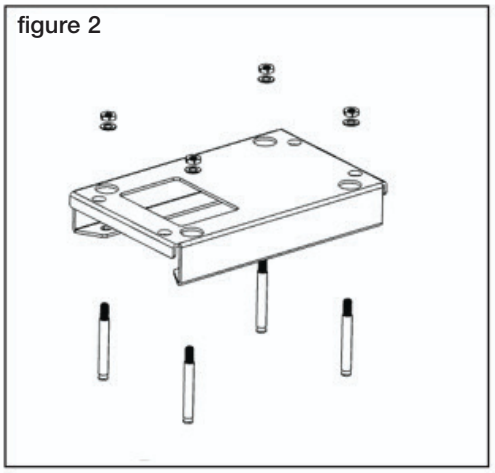

8 DISENGAGEMENT OF THE MANUAL RELEASE

1. Remove the small front plastic cover from the operator.
2. Put the key into keyhole and turn right.
3. Pull the lever down.

NOTE: To re-engage the opener follow the procedure in reverse.

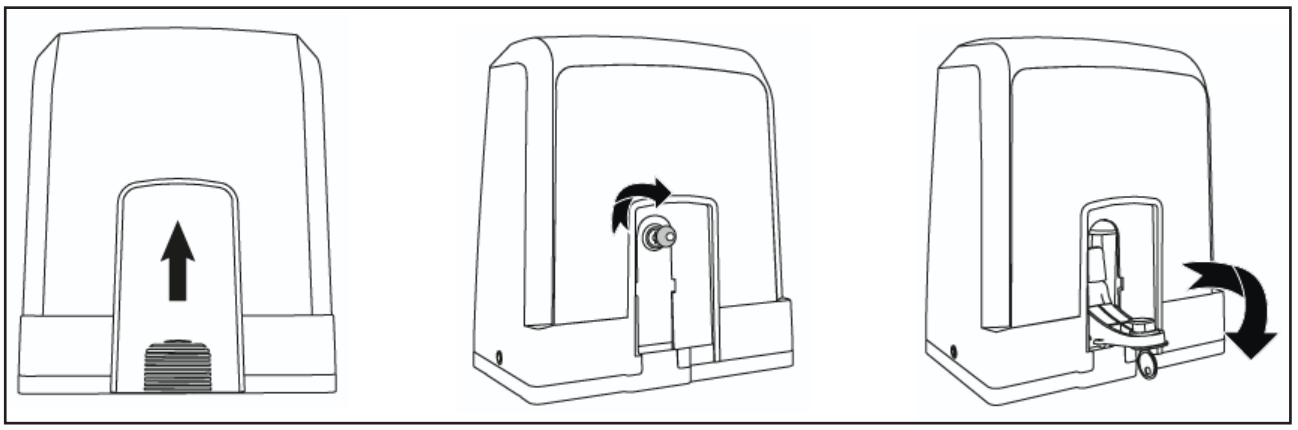

9 INSTALLING THE OPENER ON THE BASE MOUNTING PLATE

1. Remove the screws from the side of the housing (figure 1) and remove the cover.
2. Once the base mounting plate is fixed, position the gate opener onto the base mounting plate ensuring that it is correctly to the gate and the rack. See planning section for more details.
3. Using the fasteners provided, secure the gate opener to the base mounting plate (figure 2).

NOTE: If the rack is already fixed to gate, it may be required to adjust the height of the gate opener to ensure correct engagement of the drive gear with the gate rack.

figure 1

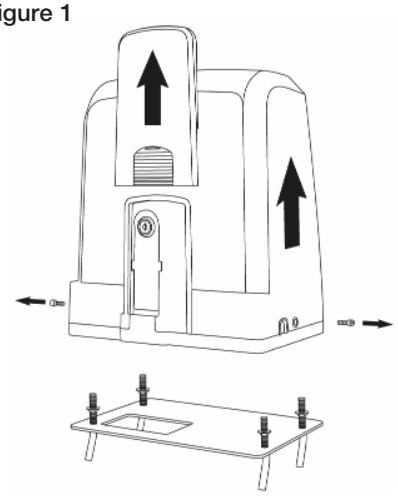

figure 2

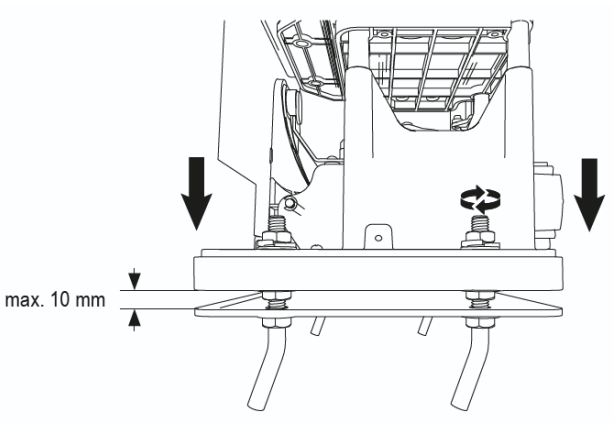

10 GATE RACK MOUNTING

1. Manually move the gate into OPEN position.
2. The nylon rack can be attached with screws. Put the first rack segment at the end of the gate so that it rests on the opener drive sprocket (figure 1) and attach the rack to the gate (figure 2).
3. Move the gate and attach the next rack segment near to the previous segment. Proceed this way until you will reach complete CLOSED position.

NOTE: If the rack is already fixed to gate, it may be required to adjust the height of the gate opener to ensure correct engagement of the drive gear with the gate rack.

figure 1

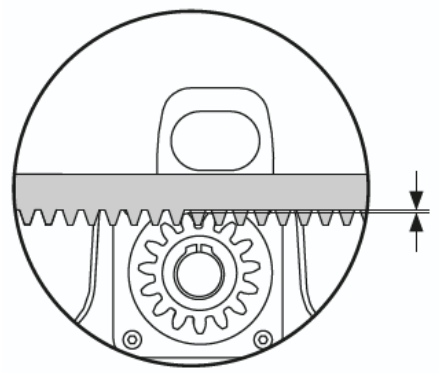

figure 2

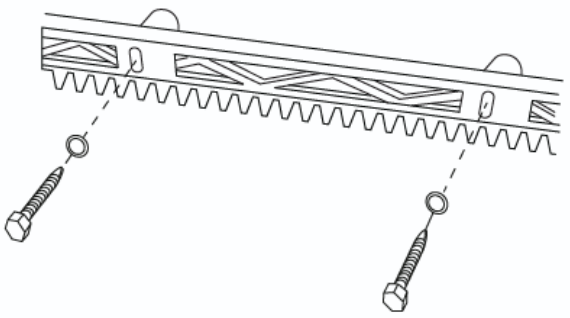

11 INSTALLING THE LIMIT SWITCH BRACKETS

1. Position the limit switch brackets in the approximate open and close positions on the rack. Loosely attach the brackets to the rack. The magnets are marked "L" and "R". L positioned on the left of the rack, while R is positioned on the right of the rack when looking from inside the property. When attaching the brackets, ensure that the magnets are 12mm to 20mm from the limit switch sensor on the opener.
2. Place the housing cover over the opener and move the gate manually to the open and close positions to ensure that the limit switch brackets do not come into contact with the gate structures or the gate opener. Position the magnets so that they will align with the sensor mounted on the opener when the gate is approximately 10mm from the OPEN or CLOSED position. This will allow for the Basic Setup to be completed without the gate hitting the stops too hard.

NOTE: After Basic Setup, fine tuning of the Limit Switch Mounting Brackets to allow the gate to open and close fully.

figure 1

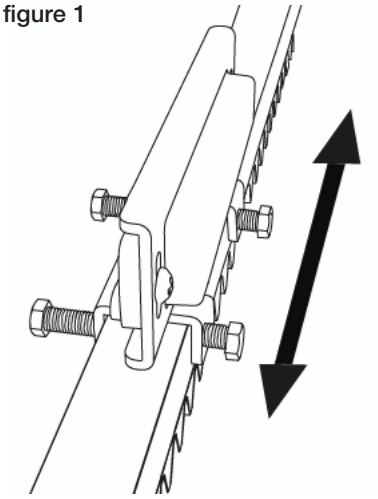

figure 2

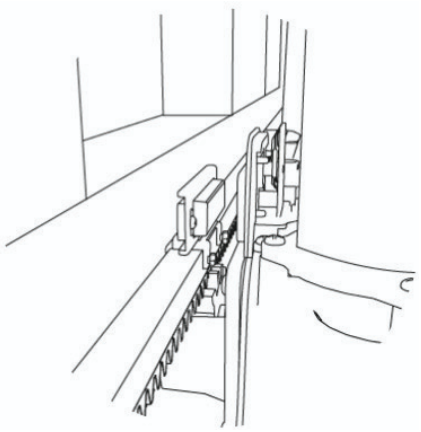

figure 3

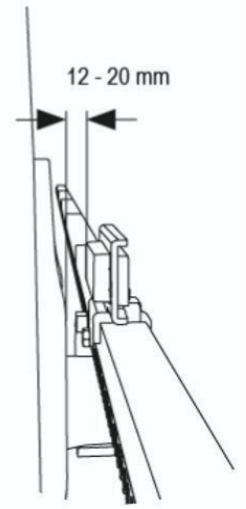

figure 4

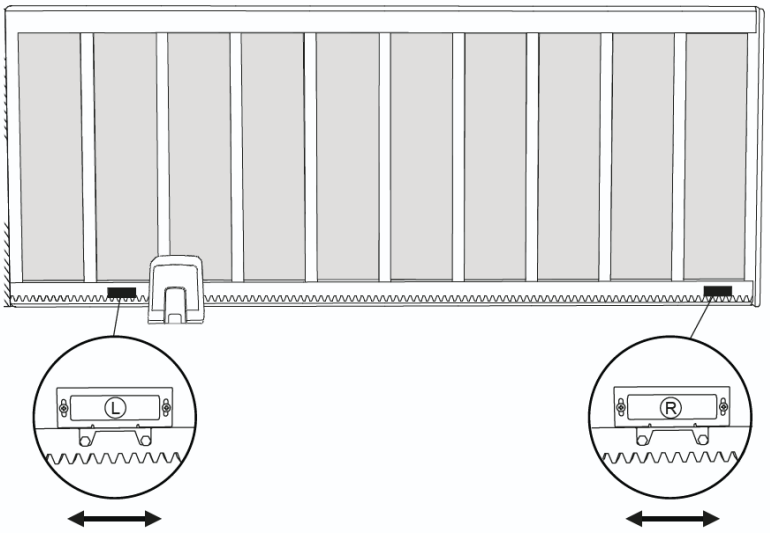

12 ELECTRICAL SAFETY

To reduce the risk of SEVERE INJURY or DEATH:

- BEFORE installing the power wiring or control stations be sure to follow all specifications and warnings. Failure to do so may result in SEVERE INJURY to persons and/or damage to the opener.
- ALL electrical connections MUST be made by a licensed electrician.
- DO NOT install any wiring or attempt to run the opener without consulting the wiring diagram.
- ALL power wiring should be on a dedicated circuit and well protected.
- ALL power and control wiring MUST be run in separate conduit.
- Disconnect power at the fuse box BEFORE proceeding.
- ANY maintenance to the opener or in the area near the opener MUST NOT be performed until disconnecting the electrical power (AC and battery). Upon completion of maintenance the area MUST be cleared and secured, at that time the unit may be returned to service.

13 COMMISSIONING THE GATE OPENER

For 240V AC opener, plug the opener into mains power. Alternatively if the gate is to be hard-wired into 240V power, this must be completed by a licensed electrician. Now go to programming section.

For 24V (Low Voltage) opener, connect the low-voltage power cord from the opener to the low-voltage power supply from the transformer box MGTR1-96VA. Proceed to programming section.

14 ACCESS TO THE CONTROL BOARD AND MOTOR CONNECTION

The control board Is already pre-installed and pre-wired to the motor terminal. No extra action Is required. To gain access to the control board remove the opener cover. The terminals for wiring accessories are directly accessible. To get access to the programming buttons remove the transparent plastic cover and place it back once programming is finalised.

figure 1

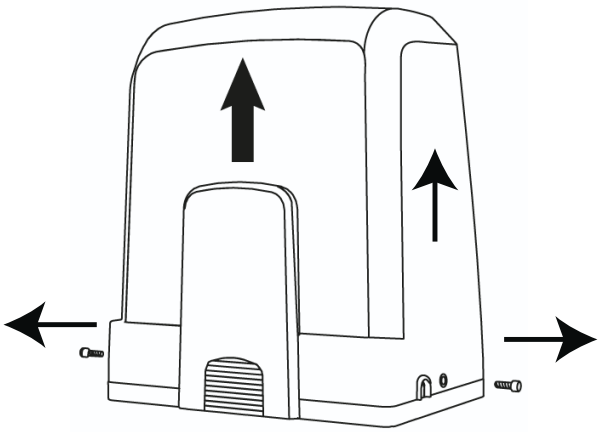

figure 2

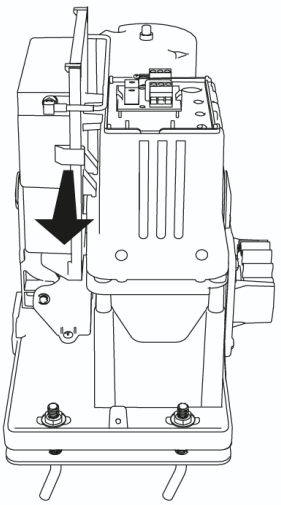

figure 3

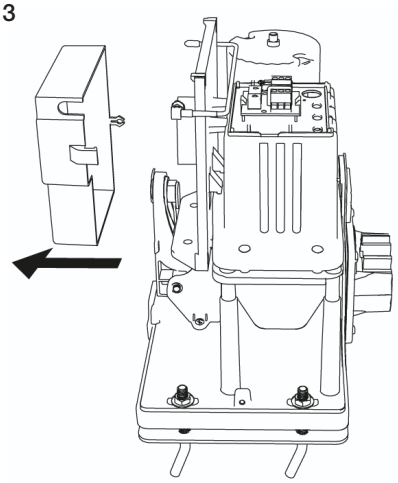

15 WIRING DIAGRAM

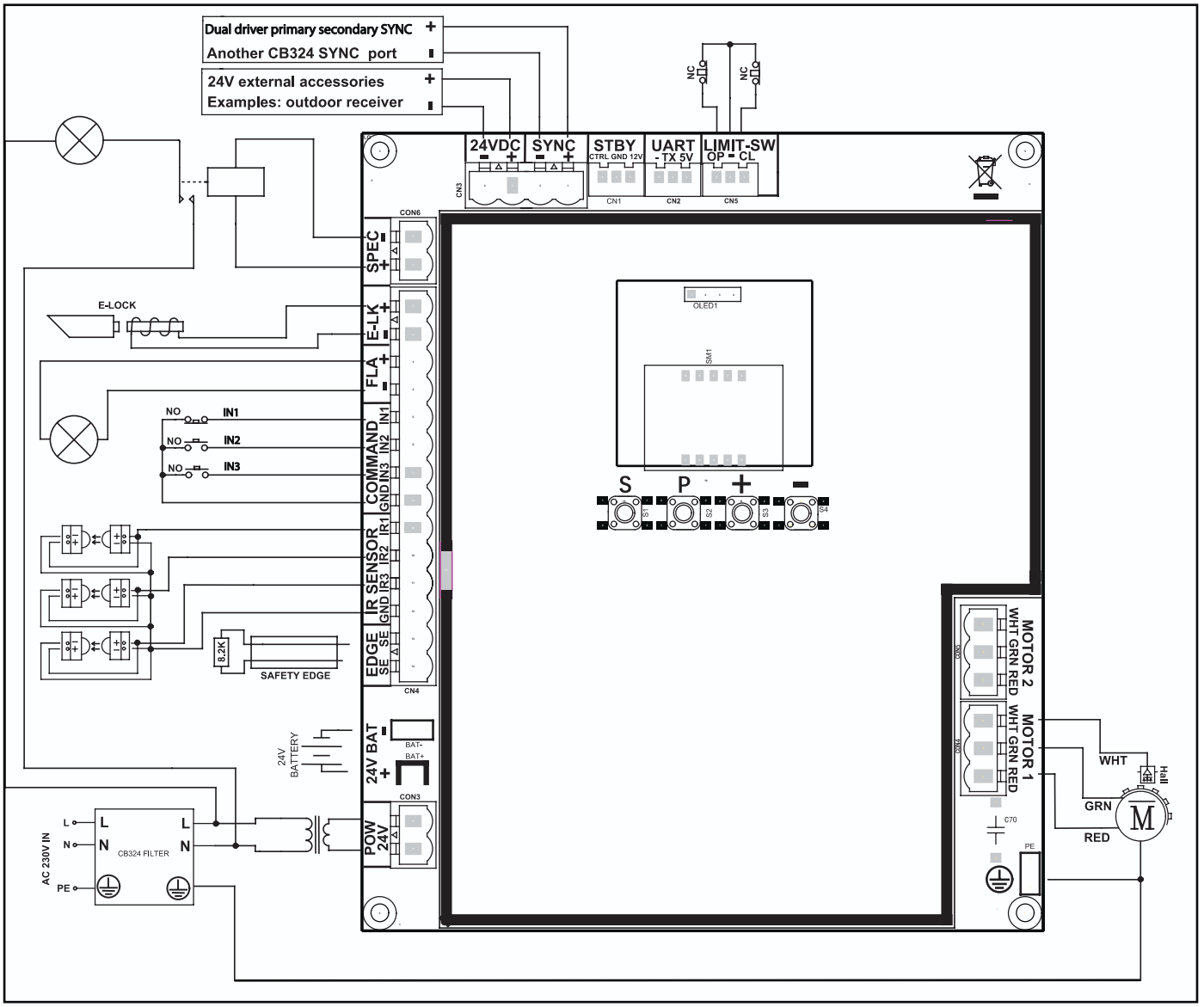

16 INSTALL ENTRAPMENT PROTECTION DEVICES

THE PROTECTOR SYSTEM™ (IR BEAMS) (OPTIONAL)

NOTE: Merlin strongly recommends that The Protector System™ (IR Beams) be installed on all gate openers. Compatible Protector System™ (IR Beams) are 772ANZ and GPS15 Monitored Safety Beams.

The Protector System™ (IR Beams) can be configured to function differently when connected to IR1, IR2 or IR3 inputs.

1. Connect the Protector System™ (IR Beams) to IR1/GND or IR2/GND and or IR3/GND.
2. The IR Beams can be configured to monitor in the open or close direction or both (see section 23 IR Behaviour).
3. The IR Beams will automatically learn to the opener after they have been connected and are default to monitor the close direction.
4. If you need to remove the IRs, you will need to unlearn them from the opener. This is done by switching off the mains power off and on again twice.

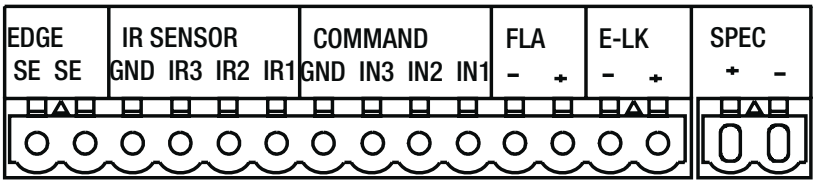

EDGE SENSOR

The Edge sensor can only be connected to the Edge inputs.

1. Remove the 8.2k resistor from the Edge inputs.
2. Connect the 8.2k compatible edge sensor to the Edge inputs.

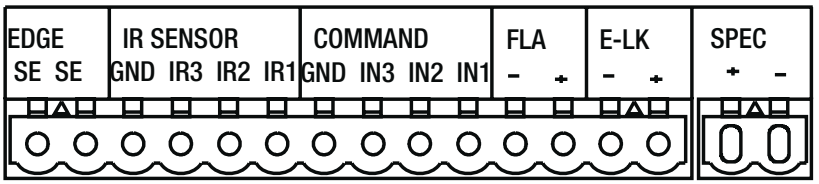

17 BATTERY BACKUP (OPTIONAL)

The batteries are charged in the circuit by the integrated transformer. Recommended items for a battery backup application (separate accessory purchase) 2 x 12V 2.2Ah SLA batteries (model MGBBU).

1. Disconnect AC power to the opener.
2. Insert the battery power wires through the same hole as the AC power wires.
3. Connect the battery cable to the BATTERY terminals on the power board.
4. Place the batteries inside the opener.
5. Connect a jumper with an in-line fuse (10A) between the positive (+) terminal on one battery and the negative (-) terminal on the other battery.
6. Connect the positive battery cable wire to the positive (+) terminal on the PCB.
7. Connect the negative battery cable wires to the negative (-) terminal on the other PCB.
8. Reconnect AC power to the opener.
9. Place cover on the opener.

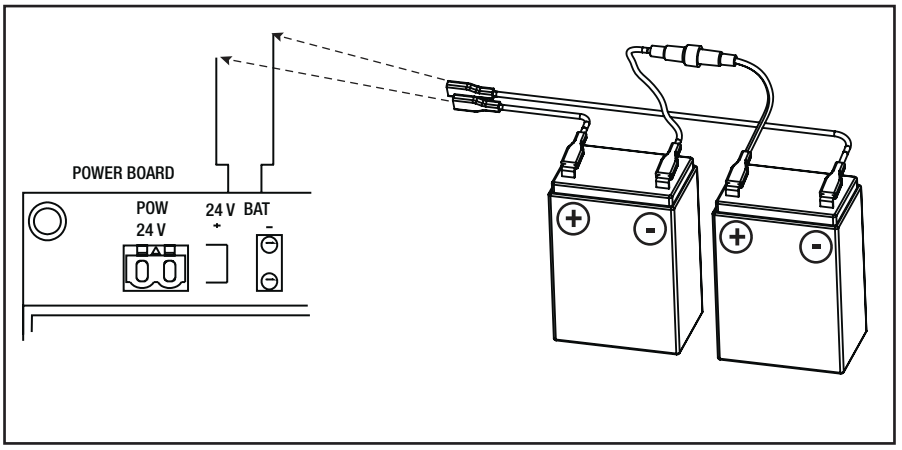

18 LCD SCREEN MENU

Programming buttons function (4 buttons):

Button	Function
S	Program / delete remote controls and specific functions
P	Enter programming mode, select function and save. NOTE long press of P button will save the setting and exit out to the menu screen.
+/-	Navigate through the menu and change the value on display

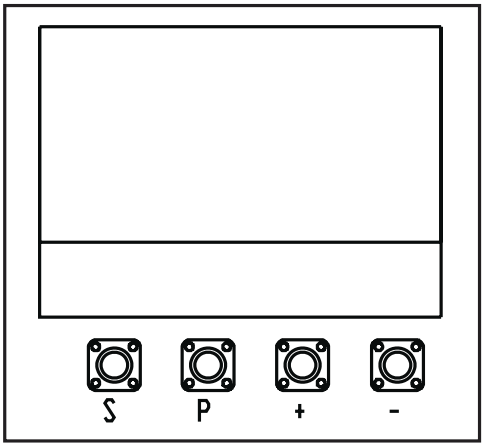

19 PROGRAMMING - OVERVIEW

The programming of the boards is divided in two steps:

1. Basic - including Initial Setup
2. Advanced - Password Protected Settings

Initial Set-up includes:

- Selection of motor type
- Motor direction
- Limits
- Forces.

After the Initial Set-up is complete, the opener will work as per default Basic Settings.

Initial Set-up is mandatory, if they are not completed, the opener will not work.

Initial Set-up is required before any further changes to Basic or Advanced settings can be made

19 OVERVIEW

Legend	Function	Section
Application	Opener Motor Type	20
Direction Motor 1	Direction Motor 1	20
Direction Motor 2	Direction Motor 2	20
Limit & Force Learn	Learning	21
Remote Control Behaviour	Adjust the behaviour of remote controls	22
IR1-Behaviour	Adjust the behaviour of Protector System Safety IR Beams in input IR 1	23
IR2-Behaviour	Adjust the behaviour of Protector System Safety IR Beams in input IR 2	23
IR3-Behaviour	Adjust the behaviour of Protector System Safety IR Beams in input IR 3	23
Input 1	Adjust the behaviour of Input 1 command	24
Input 2	Adjust the behaviour of Input 2 command	24
Input 3	Adjust the behaviour of Input 3 command	24
Pedestrian	Setup pedestrian opening mode	25
Delay Motor 2-Open	Adjust timing delay of motor 2 in open direction	26
Delay Motor 1-Close	Adjust timing delay of motor 1 in close direction	27
Timer-To-Close	Setup timer-to-close feature	28
Reversal Time	Reversal time after obstruction has been detected	29
E-Lock	E-Lock	30
Ram-Blow	Setup additional electronic lock (E-Lock) or Mag-Lock options	31
Flashing Light	Setup flashing light accessory	32
Pre Flashing	Adjust pre flashing of flashing light accessory	33
Special Contact Relay	Adjust how the special contact input will behave	34
Soft & Hard Start Setting	Disable or enable the soft & hard starts	35
Maintenance Counter	Setup maintenance counter for service alerts	36
The above completes the Basic Setting requirements		
Password	Setup, enter and change password in order to enter into the Advance settings	37
Force Motor 1-Open (PW)	Adjust the forces of motor 1 in open direction	38
Force Motor 1-Close (PW)	Adjust the forces of motor 1 in close direction	38
Force Motor 2-Open (PW)	Adjust the forces of motor 1 in open direction	38
Force Motor 2-Close (PW)	Adjust the forces of motor 2 in close direction	38
Speed-Motor 1 & 2 Open (PW)	Adjust the speed of motor 1 and 2 in open direction	39
Speed-Motor 1 & 2 Close (PW)	Adjust the speed of motor 1 and 2 in close direction	40
Soft Stop Speed (PW)	Adjust the soft speed, which is the remaining speed towards the end of the travel	41
Factory Reset	Reset opener	42
Finish and Exit	Complete and exit screen	N/A

20 INITIAL SET-UP

Energise the opener. Release the opener manual release with the key, and move the gate(s) to a mid open position. Re-engage the manual release.

The LCD screen will display the Cycle count.

1. Press and hold the “P” button for approximately 5 seconds to enter into the Main Menu. MAIN MENU SELECT APPLICATION will be displayed on the LCD.
2. Press the “P” button once to enter this Menu option.
3. Use the “+” or “-” to scroll though the motor application options. When “SLIDER MGS600” is shown, press the “P” button to select. The screen will change to show MAIN MENU SELECT APPLICATION.
4. Press the “+” button once to scroll to the next menu option. “MAIN MENU DIRECTION MOTOR1” will be displayed on the LCD.
5. Press the “P” button to select. The screen will change to show PRESS & HOLD “+” GATE OPENING? YES “P”, NO “S”.
6. Press and hold “+”. The gate will start to move.
   a) If it moves in the OPEN direction, press “P” to confirm”. The screen will change to show MAIN MENU DIRECTION MOTOR!
   b) If the gate moves in the CLOSE direction, press “S” to confirm. The screen will change to ***EXECUTE MOTOR DIRECTION CHANGE.***
   Press “P” to confirm.
   Once the direction has been confirmed, the screen will change to MAIN MENU DIRECTION MOTOR. If there is a second slide gate opener to be setup, press the ”+” button to scroll to the next menu option “MAIN MENU DIRECTION MOTOR2 and follow the steps 5 and 6.
7. Press the “+” button once to scroll to the next menu option. “MAIN MENU LIMIT&FORCE LEARN” will be displayed on the LCD.
8. Press the “P” button to select. ***The gate will start to move.*** The screen will change and LIMIT&FORCE LEARN will flash on the screen.
9. Once complete, the gate will stop moving and the screen will change to CYCLES: 000,000 STANDBY GATE CLOSED.

Initial setup is now complete. The opener will now operate using default Basic Settings.

NOTE: If the LIMIT&FORCE LEARN setup needs to be stopped, press the “S” button. The Screen will display LIMIT&FORCE LEARN INTERRUPTED. After 5 seconds, the screen will display LIMIT&FORCE LEARN. Repeat step 8 to complete basic setup.

figure 1

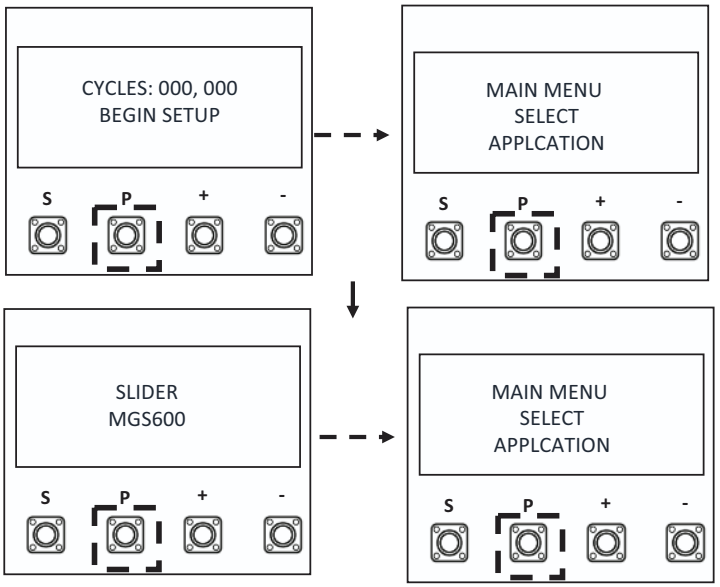

figure 2

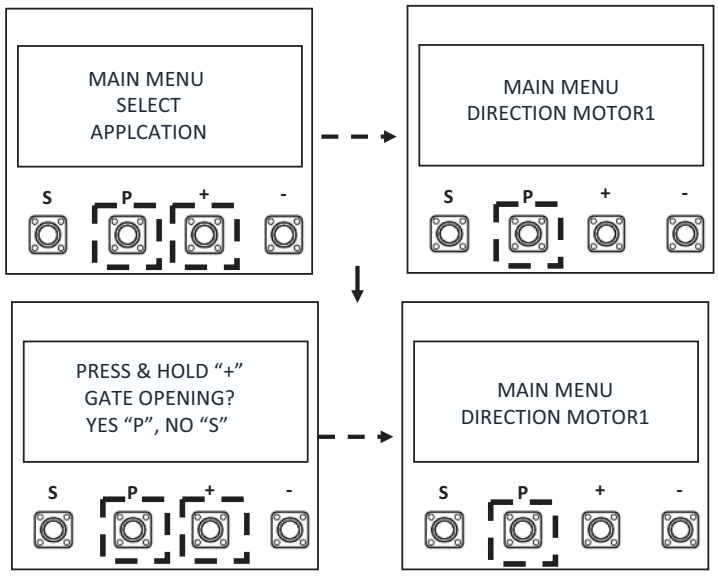

figure 3

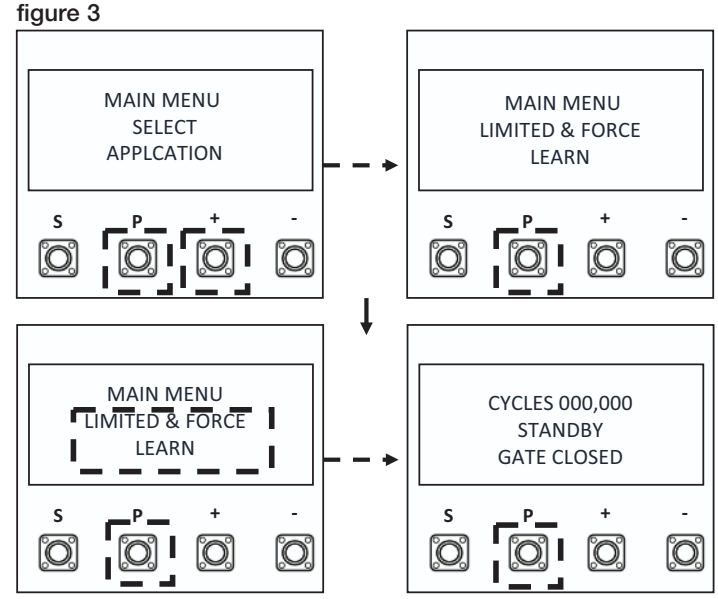

21 LIMIT AND FORCE LEARNING

Within the Basic Setting, navigate through the menu screen until you find “MAIN MENU LIMIT & FORCE LEARN”.

1. Press the “P” button to enter this setting (figure1).
2. The menu screen will begin flashing “LIMIT & FORCE LEARN” while this sequence is in progress and ***the gate will start to move.***
3. Three seconds after successfully completing the “LIMIT & FORCE LEARN” setup, the display will return to the main menu in standby mode.

Note: If the LIMIT & FORCE LEARN setup needs to be stopped, press “S” button. The screen will display “LIMIT & FORCE LEARN INTERRUPTED” (figure 2).

After 5 seconds, the screen will display “LIMIT & FORCE LEARN”.

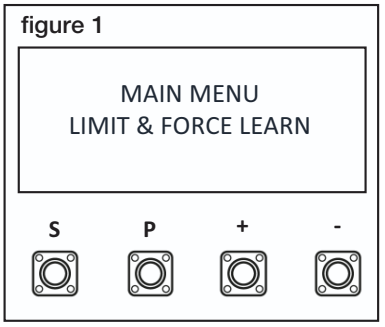

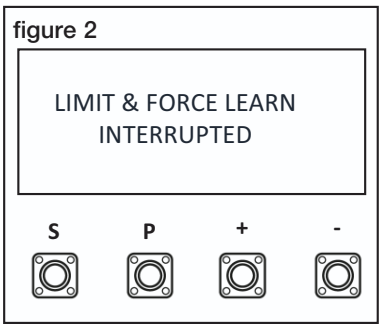

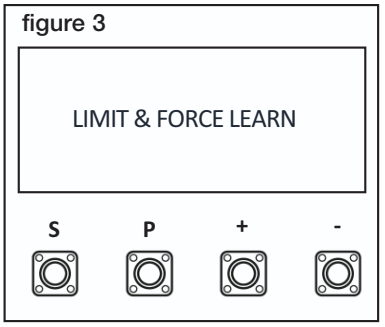

22 REMOTE CONTROL BEHAVIOUR

Within the Advance Setting, navigate through the menu screen until you find “MAIN MENU REMOTE CONTROL BEHAVIOUR”.

1. Press the “P” button to enter this setting.
2. Press the “+” or “-“ buttons to navigate through the options.
3. You can select the following options:
   - OPEN-CLOSE-OPEN
   - OPEN-STOP-CLOSE-STOP
   - OPEN-STOP-CLOSE-OPEN
   - OPEN ONLY
4. To confirm the setting, press the “P” button to save and return to the main menu screen.

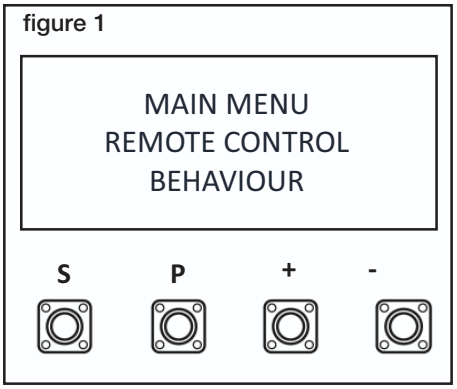

23 IR BEHAVIOUR

Within the Basic Setting, navigate through the menu screen until you find “MAIN MENU IR1-BEHAVIOUR”.

1. Press the “P” button to enter this setting (figure 1).
2. Press the “+” or “-“ buttons to navigate through the options.
3. You can select the following options:
   - IR1-CLOSE DIR
   - IR1-OPEN DIR
   - IR1-OPEN & CLOSE DIR
   - IR1-CLOSE DIR + IMMEDIATE CLOSE
4. To confirm the setting, press the “P” button to save and return to the main menu screen.

NOTE: The above process is the same for IR2 & IR3 Behaviour.

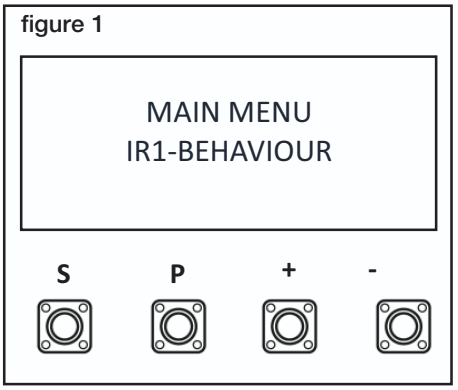

NOTE: If Timer To Close (TTC) is activated, during the pause time, when released after 2 seconds it will close immediately.

24 INPUT COMMAND

Within the Basic Setting, navigate through the menu screen until you find “MAIN MENU INPUT 1”.

1. Press the “P” button to enter this setting (figure 1).
2. Press the “+” or “-“ buttons to navigate through the options.
3. You can select the following options:
   - OPEN-CLOSE-OPEN
   - OPEN-STOP-CLOSE-STOP-OPEN
   - OPEN-STOP-CLOSE-OPEN
   - PEDESTRIAN OPENING
   - STOP
   - OPEN ONLY
   - CLOSE ONLY
   - OPEN-STOP-OPEN-STOP
   - CLOSE-STOP-CLOSE-STOP
   - OPEN-HOLD TO RUN *
   - CLOSE-HOLD TO RUN
4. To confirm the setting, press the “P” button to save and return to the main menu screen.

NOTE: The above process is the same for Input Command for Input 2 & Input 3.

*** If a latching toggle swtich is used, this will override timer-to-close.**

figure 1

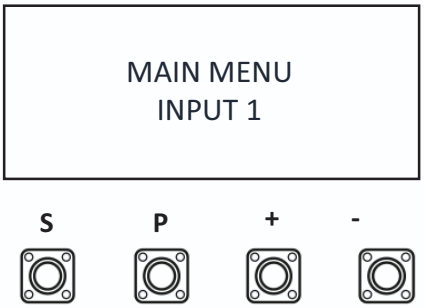

25 PEDESTRIAN COMMAND

Within the Basic Setting, navigate through the menu screen until you find “MAIN MENU PEDESTRIAN".

1. Press the “P” button to enter this setting (figure 1).
2. Press the “+” or “-“ buttons to navigate through the options.
3. You can select the following options:
   - OPEN 1.5 METERS
   - OPEN 2 METERS
   - OPEN 3 METERS
4. To confirm the setting, press the “P” button to save and return to the main menu screen.

figure 1

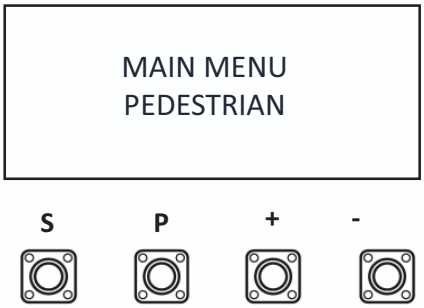

26 DELAY MOTOR 2 IN OPEN DIRECTION

Within the Basic Setting, navigate through the menu screen until you find “MAIN MENU DELAY MOTOR 2 - OPEN".

1. Press the “P” button to enter this setting (figure 1).
2. Press the “+” or “-“ buttons to navigate through the options.
3. You can select the following options:
   - No
   - Second Delay
   - Second Delay
   - 3 Second Delay
   - 4 Second Delay
4. To confirm the setting, press the “P” button to save and return to the main menu screen.

figure 1

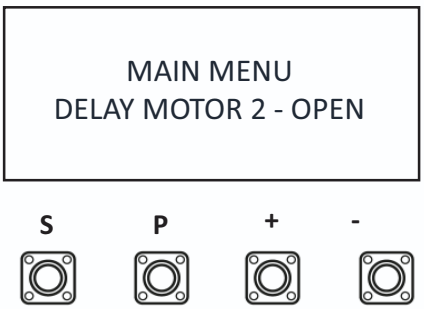

27 DELAY MOTOR 1 IN CLOSE DIRECTION

Within the Basic Setting, navigate through the menu screen until you find "MAIN MENU DELAY MOTOR 1 - CLOSE".

1. Press the "P" button to enter this setting (figure 1).
2. Press the "+" or "-" buttons to navigate through the options.
3. You can have no delay, or select delays from 1 second to 20 seconds.
4. To confirm the setting, press the "P" button to save and return to the main menu screen.

figure 1

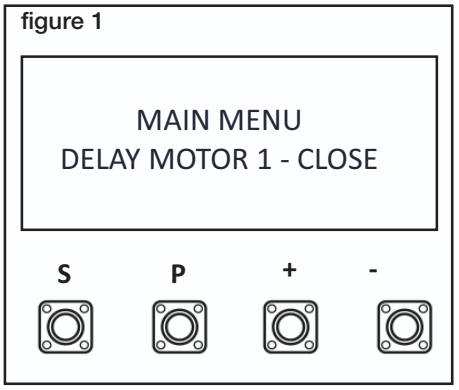

28 TIMER TO CLOSE (TTC)

Within the Basic Setting, navigate through the menu screen until you find "MAIN MENU TIMER-TO-CLOSE".

1. Press the "P" button to enter this setting (figure 1).
2. Press the "+" or "-" buttons to navigate through the options.
3. You can select the following options:
   - TTC Disabled
   - Setting TTC 10 Seconds
   - Setting TTC 20 Seconds
   - Setting TTC 30 Seconds
   - Setting TTC 45 Seconds
   - Setting TTC 1 Minute
   - Setting TTC 1.5 Minutes
   - Setting TTC 2 Minutes
   - Setting TTC 3 Minutes
   - Setting TTC 5 Minutes
4. To confirm the setting, press the "P" button to save and return to the main menu screen.

figure 1

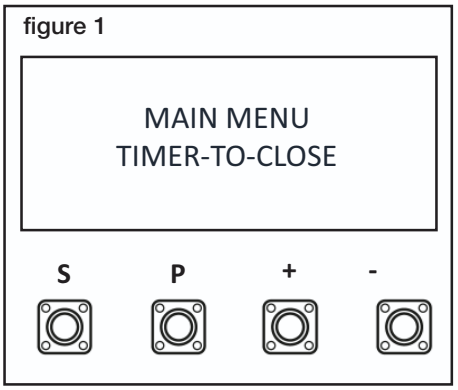

29 REVERSAL TIME

Within the Basic Setting, navigate through the menu screen until you find “MAIN MENU REVERSAL TIME”.

1. Press the “P” button to enter this setting (figure 1).
2. Press the “+” or “-“ buttons to navigate through the options.
3. To confirm the setting, press the “P” button to save and return to the main menu screen.

figure 1

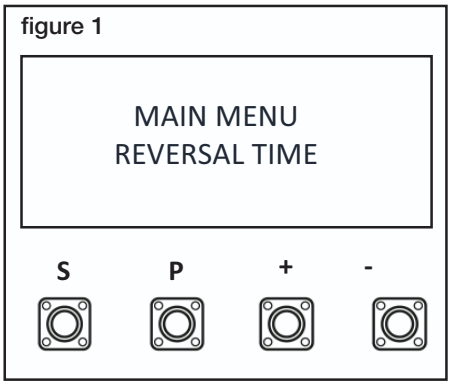

figure 2

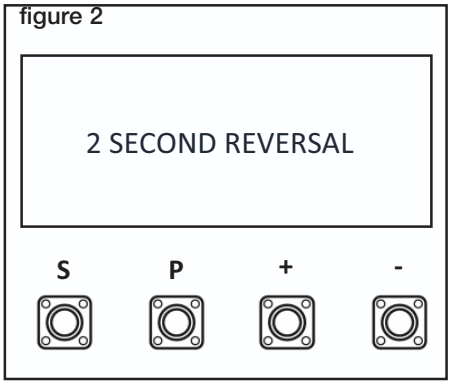

figure 3

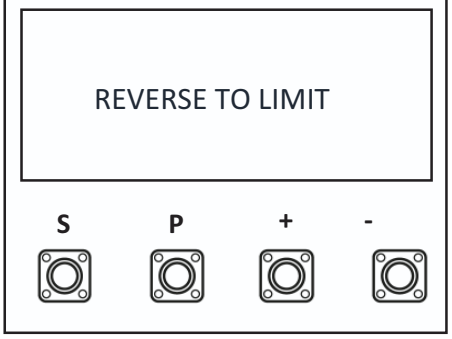

figure 4

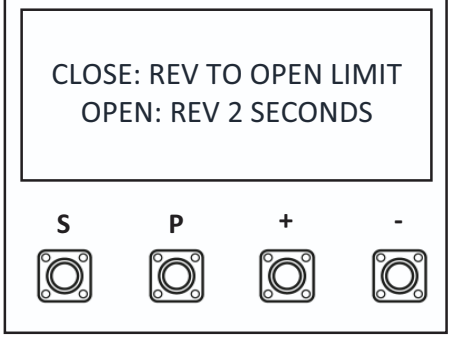

30 E-LOCK

Within the Basic Setting, navigate through the menu screen until you find “MAIN MENU E-LOCK”.

1. Press the “P” button to enter this setting (figure 1).
2. Press the “+” or “-“ buttons to navigate through the options.
3. You can select the following options:
   - Disabled
   - E-Lock, 1 Second
   - E-Lock, 2 Seconds
   - Mag-Lock
4. To confrim the setting, press the “P” button to save and return to the main menu screen.

figure 1

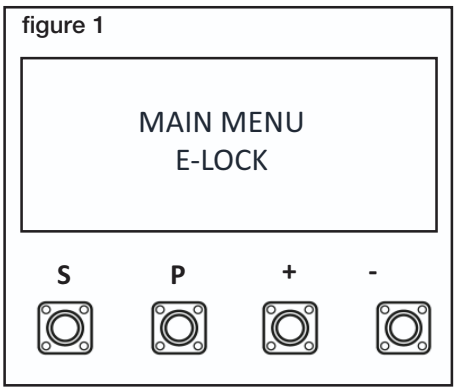

31 RAM BLOW MOTOR 1 FOR E-LOCK

Within the Basic Setting, navigate through the menu screen until you find “MAIN MENU RAM-BLOW".

1. Press the “P” button to enter this setting (figure 1).
2. Press the “+” or “-“ buttons to navigate through the options.
3. You can select the following options:
   - Disabled
   - RAM-BLOW 1 Second
   - RAM-BLOW 2 Seconds
4. To confirm the setting, press the “P” button to save and return to the main menu screen.

NOTE: This setting is only available if E-Lock or Mag-Lock is not activated.

figure 1

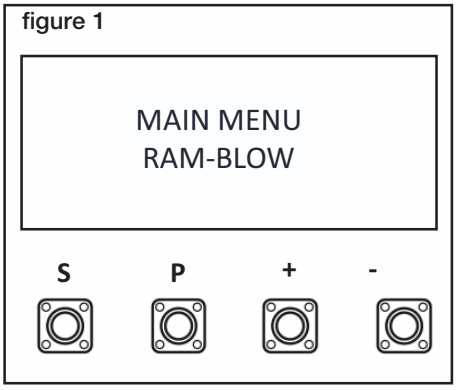

32 FLASHING LIGHT

Within the Basic Setting, navigate through the menu screen until you find “MAIN MENU FLASHING LIGHT”.

1. Press the “P” button to enter this setting (figure 1).
2. Press the “+” or “-“ buttons to navigate through the options.
3. You can select the following options:
   - Disabled
   - Continuous
   - Flashing
4. To confirm the setting, press the “P” button to save and return to the main menu screen.

figure 1

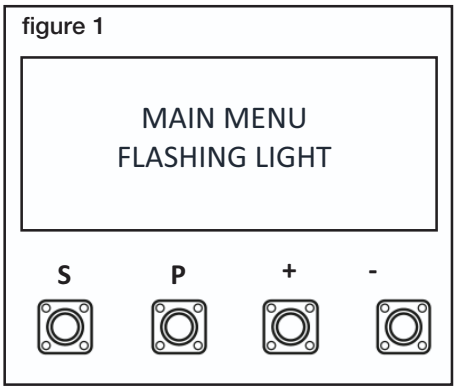

33 PRE FLASHING

Within the Basic Setting, navigate through the menu screen until you find “MAIN MENU PRE FLASHING”.

1. Press the “P” button to enter this setting (figure 1).
2. Press the “+” or “-“ buttons to navigate through the options.
3. You can select the following options:
   - Disabled
   - 1 Second
   - 2 Seconds
   - 3 Seconds
   - 4 Seconds
   - 5 Seconds
4. To confirm the setting, press the “P” button to save and return to the main menu screen.

NOTE: This setting is only available if Flashing Light is not activated.

figure 1

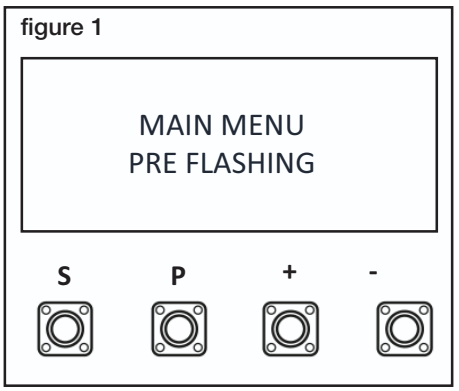

34 SPECIAL CONTACT

Within the Basic Setting, navigate through the menu screen until you find “MAIN MENU SPECIAL CONTACT RELAY".

1. Press the “P” button to enter this setting (figure 1).
2. Press the “+” or “-“ buttons to navigate through the options.
3. You can select the following options:
   - Disabled
   - 15 Seconds
   - 30 Seconds
   - 45 Seconds
   - 60 Seconds
   - 90 Seconds
   - 120 Seconds
   - 180 Seconds
   - 240 Seconds
   - 300 Seconds
4. To confirm the setting, press the “P” button to save and return to the main menu screen.

figure 1

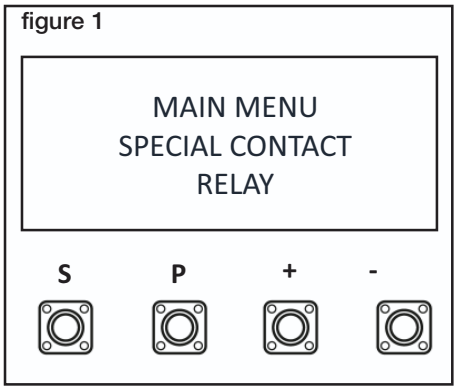

35 SOFT AND HARD START IN OPEN AND CLOSE DIRECTION

Within the Basic Setting, navigate through the menu screen until you find “MAIN MENU SOFT & HARD START SETTING”.

1. Press the “P” button to enter this setting (figure 1).
2. Press the “+” or “-“ buttons to navigate through the options.
3. You can select the following options:
   - Soft & Hard Start Disabled
   - Soft Start Enabled
   - Hard Start Enabled
4. To confirm the setting, press the “P” button to save and return to the main menu screen.

figure 1

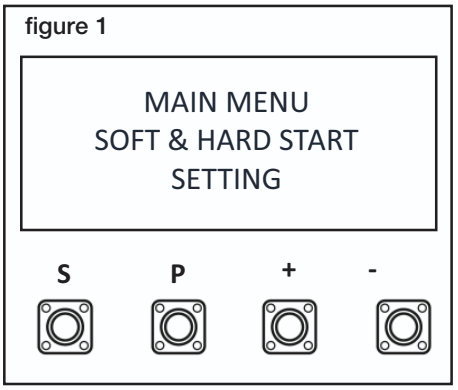

36 MAINTENANCE COUNTER

Within the Basic Setting, navigate through the menu screen until you find “MAIN MENU MAINTENANCE COUNTER”.

1. Press the “P” button to enter this setting (figure 1).
2. Press the “+” or “-“ buttons to navigate options.
3. You can Disable the maintenance counter or select the maintenance counter to count from 1,000 cycles to 20,000 cycles.
4. To confirm the setting, press the “P” button to save and return to the main menu screen.

figure 1

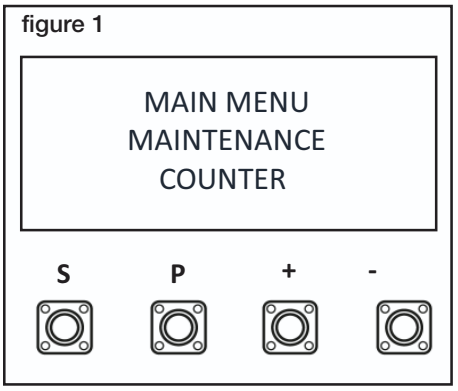

If the Default speed and force values are changed in the Advanced Settings, the force reversal behaviour of the gate opener may be affected. Additional safety devices must be used for installations where the force measured on the leading edge of the gate in both the open and close direction is over 400N. Installers must ensure that the gates are installed in a compliant manner as per AS/NZS 60335.2.103.

37 PASSWORD

SET PASSWORD

1. Navigate the Menu screen till you get to "MAIN MENU PASSWORD" by pressing the "+" and or "-" buttons (figure 1).
2. Press the "P" button to enter into "MAIN MENU PASSWORD" (figure 1).
3. Select "SET PASSWORD" and press the "P" button (figure 2).
4. The screen will display 0000 (figure 3).
5. Setup password of four digits which can be any four digits from.

figure 1

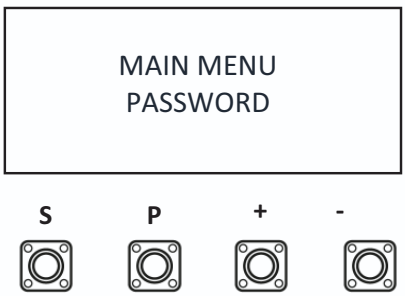

figure 2

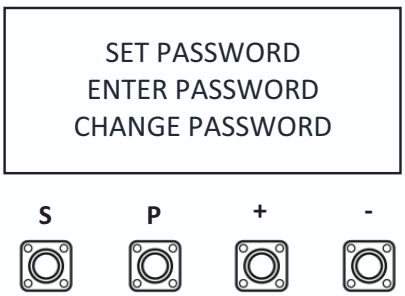

figure 3

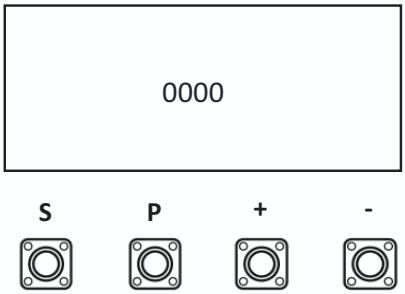

CHANGE PASSWORD

1. Navigate the Menu screen till you get to "MAIN MENU PASSWORD" by pressing the "+" and or "-" buttons (figure 1).
2. Press the "P" button to enter this setting (figure 1).
3. Select "CHANGE PASSWORD" and press the "P" button (figure 2).
4. Enter the old four digit password and then press the "P" button (figure 3).
5. Now you must setup the new four digit password. Press the "P" button when you would like to save the new password (figure 4).

figure 1

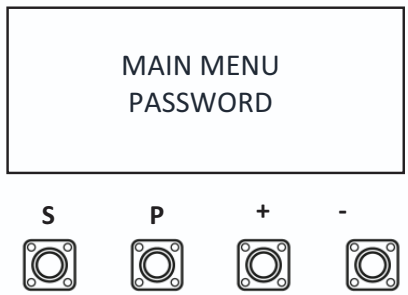

figure 2

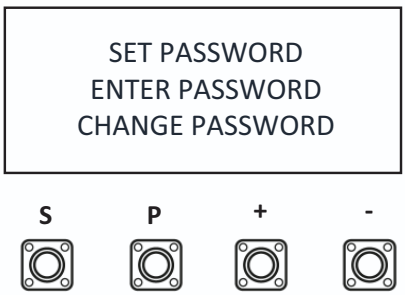

figure 3

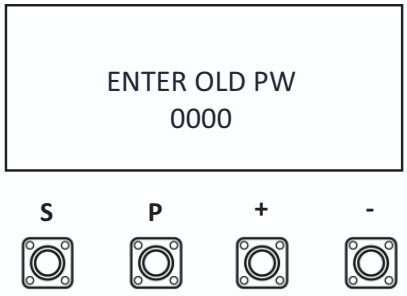

figure 4

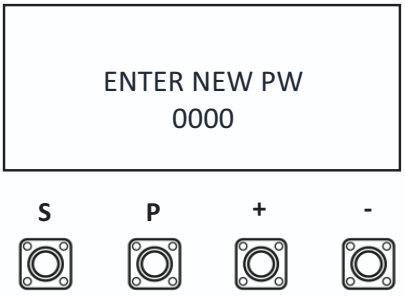

37 PASSWORD

ENTER PASSWORD

1. Navigate the Menu screen till you get to "MAIN MENU PASSWORD" by pressing the "+" and or "-" buttons (figure 1).
2. Press the "P" button to enter this setting (figure 1).
3. Select "ENTER PASSWORD" and press the "P" button (figure 2).
4. Enter the four digit password and then press the "P" button.

NOTE: If the incorrect password is entered, "ERR: WRONG PW" will be displayed for 2 seconds on the screen 0001 to 9999.

figure 1

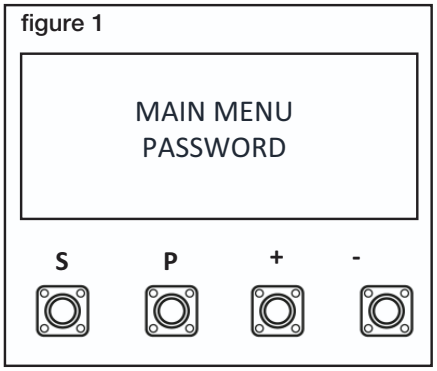

figure 2

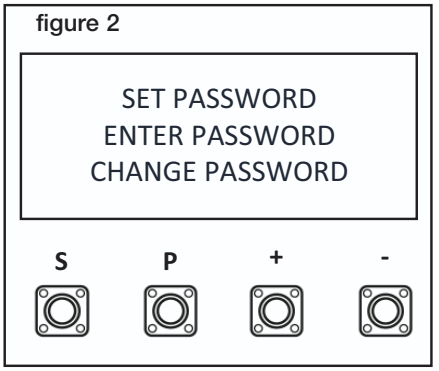

figure 3

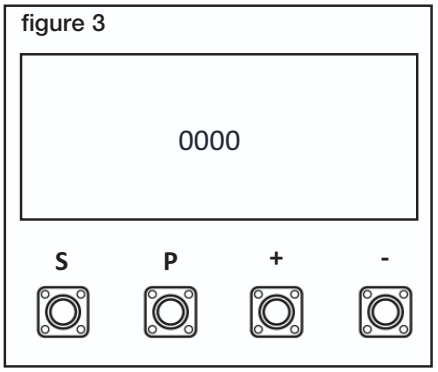

38 FORCE MOTOR 1 & 2 OPEN / CLOSE (PASSWORD PROTECTED)

NOTE: To access this setting the password must be entered.

Within the Advance Setting, navigate through the menu screen unil you find MAIN MENU FORCE MOTOR 1 & 2 OPEN or MAIN MENU FORCE MOTOR 1 & 2 CLOSE (PW).

1. Press the "P" button to enter this setting (figure 1).
2. Press the "+" or "-" buttons to navigate through the options.
3. You can increase the force by 15%, 30% or 50%.
4. To confirm the setting, press the "P" button to save and return to the main menu screen.

figure 1

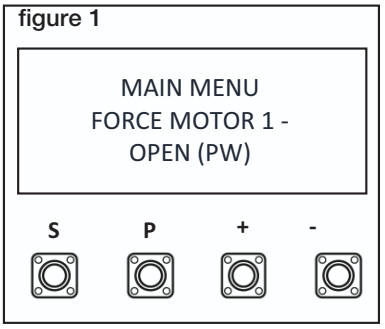

figure 1

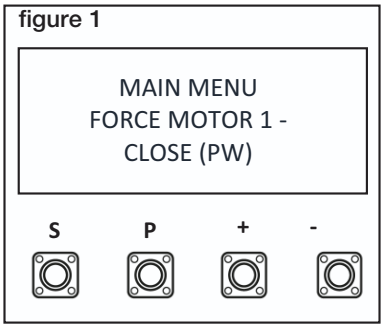

figure 2

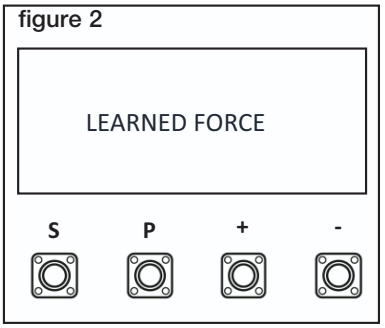

figure 2

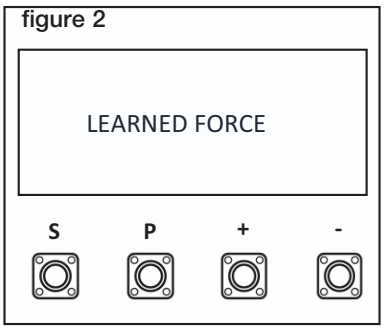

39 SPEED MOTORS 1 AND 2 IN OPEN DIRECTION (PASSWORD PROTECTED)

NOTE: To access this setting the password must be entered.

Within the Advance Setting, navigate through the menu screen until you find “MAIN MENU SPEED-MOTOR 1 & 2 OPEN (PW)”.

1. Press the “P” button to enter this setting (figure 1).
2. Press the “+” or “-“ buttons to navigate through the options.
3. You can increase the speed by 10%, 20%, 30% or 50%. In addition you can decrease the speed by 10% or 20% of the default speed.
4. To confirm the setting, press the “P” button to save and return to the main menu screen.

figure 1

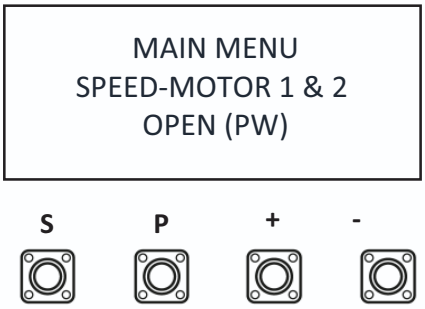

40 SPEED MOTORS 1 AND 2 IN CLOSE DIRECTION (PASSWORD PROTECTED)

NOTE: To access this setting the password must be entered.

Within the Advance Setting, navigate through the menu screen until you find “MAIN MENU SPEED-MOTOR 1 & 2 CLOSE (PW)".

1. Press the “P” button to enter this setting (figure 1).
2. Press the “+” or “-“ buttons to navigate through the options.
3. You can increase the speed by 10%, 20%, 30% or 50%. In addition you can decrease the speed by 10% or 20% of the default speed.
4. To confirm the setting, press the “P” button to save and return to the main menu screen.

figure 1

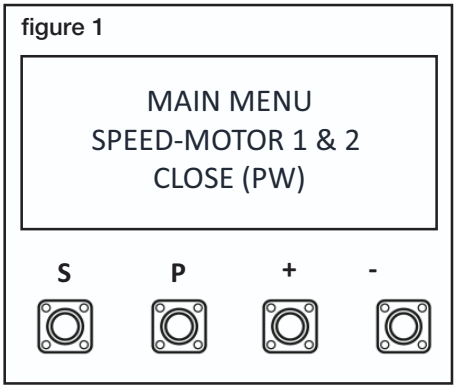

41 SOFT-STOP SPEED IN OPEN AND CLOSE DIRECTION (PASSWORD PROTECTED)

NOTE: To access this setting the password must be entered.

Within the Advance Function, navigate through the menu screen until you find “MAIN MENU SOFT STOP SPEED (PW)”.

1. Press the “P” button to enter this setting (figure 1).
2. Press the “+” or “-“ buttons to navigate through the options
3. You can increase the speed by 10%, 20%, 30% or 50%. In addition you can decrease the speed by 10% or 20% of the default speed.
4. To confirm the setting, press the “P” button to save and return to the main menu screen.

figure 1

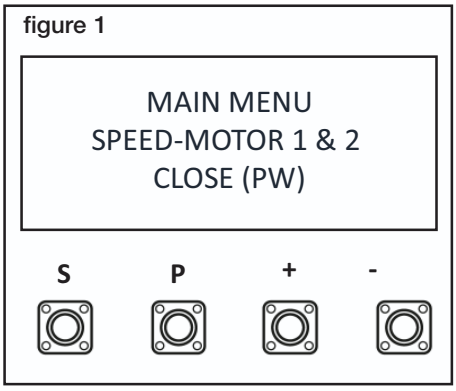

42 FACTORY RESET

Within the Advance Setting, navigate through the menu screen until you find "MAIN MENU FACTORY RESET".

1. Press the "P" button to enter this setting (figure 1).
2. Press the "+" or "-" buttons to navigate through the options.
3. You can select the following options:

- Execute Factory Reset
- Exit

4. To confirm the setting, press the "P" button to save and return to the main menu screen.

NOTE: Deletes all settings, including passwords. Does not delete remote controls and myQ devices.

figure 1

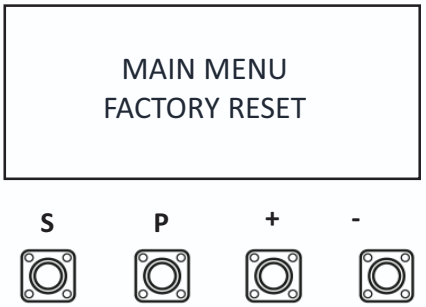

43 REMOTE CONTROL PROGRAMMING

Activate the opener only when the gate is in full view, free of obstruction and properly adjusted. Do not allow children to operate push button(s) or transmitter(s). Do not allow children to play near the gate.

NOTE: The transmitter(s) supplied with your opener are preprogrammed by the factory. If you purchase additional transmitters, the gate opener must be programmed to accept the new transmitter code.

Programming of Remote Controls

1. Press and Hold the button on the hand-held transmitter or wall button that you wish to use.
2. Press and release the "S" button on the opener.
3. Release the remote control button after 3 seconds. It has learnt the code.
4. The screen will change to TRANSMITTER LEARNED before changing back to the STANDBY screen.

Now the opener will operate when the transmitter button is pressed.

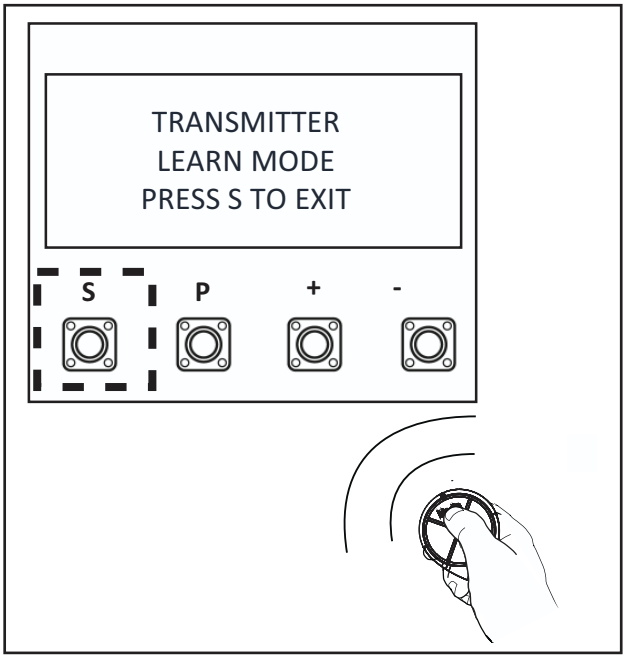

Programming of Remote Controls to activate Pedestrian mode

1. Press and Hold the button on the hand-held transmitter or wall button that you wish to use.
2. Press and release the "S" and "+" buttons simultaneously on the opener.
3. Release the remote control button after 3 seconds. It has learnt the code.
4. The screen will change to TRANSMITTER LEARNED before changing back to the STANDBY screen.

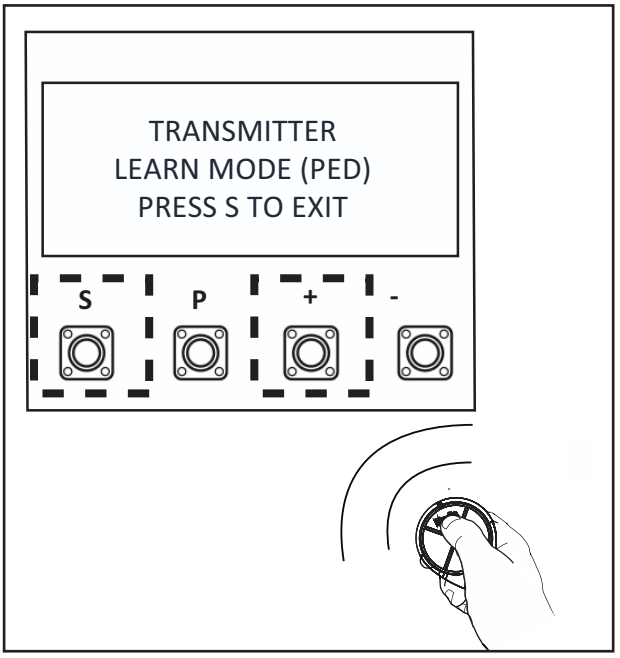

To Erase all Transmitter Codes

1. Press and hold the “S” button on the opener for approx. 6 seconds.
2. Release the button, all codes are now erased.
3. The screen will change to ALL TRANSMITTERS ERASED before changing back to the STANDBY screen.

44 MYQ SETUP – MYQ GATEWAY INSTALLATION (OPTIONAL)

The entire range of Merlin gate openers are myQ Compable and the below icon should be seen on the gate opener.

WARNING: Important Safety Instructions:
To prevent possible series injury/death, or property damage read and follow all instructions carefully.

The myQ® gateway is an accessory that can be purchased individually or as part of the myQ Connectivity Kit.

How To Connect The Merlin Gate Opener:

Scenario 1:

If the homeowner currently already has a Merlin gate opener or other device that is connected to the myQ App via a myQ® gateway accessory, the homeowner will need to:

- Purchase a Merlin gate opener that is myQ compatible (the latest range of Merlin gate openers are all myQ compatible)
- Ensure the Merlin gate opener is installed
- Purchase a set of the Protector System (Safety IR Beams) 772ANZ model or GPS15 Reflector Safety IR Beams
- Ensure the 772ANZ Protector System (Safety IR Beams) or GPS15 Reflector Safety IR Beams are installed
- Add the gate opener as an additional device to the myQ gateway through the myQ App.

Scenario 2:

If the homeowner doesn't have any myQ compatible products connected to the myQ App via a myQ® gateway accessory, the homeowner will need to:

- Purchase a Merlin gate opener that is myQ compatible (the latest range of Merlin gate openers are all myQ compatible)
- Ensure the Merlin gate opener is installed
- Purchase the gate myQ Connectivity Kit that includes 1 x myQ Gateway and 1 x 772ANZ Protector System (Safety IR Beams)
- Ensure the 772ANZ Protector System (Safety IR Beams) or GPS15 Reflector Safety IR Beams are installed
- Ensure the myQ Gateway is connected to the home internet router
- Create a myQ Account (if none exists) and sign into the myQ App
- Add the myQ Gateway
- Add the gate opener as an additional device to the myQ gateway through the myQ App (see page 38 for more details)

The myQ Gateway: is designed to operate with Merlin Gate openers and all the SAFETY INSTRUCTIONS detailed in this manual need to be observed.

Unattended Operation: The myQ Gateway allows operation of the gate via an internet enabled product, without visual monitoring. Never allow anyone to pass through, or leave obstacles in the area of a moving gate. Persons, pets and vehicles should remain clear until the gate has completely stopped.

Automatic Gate: The gate may operate unexpectedly, therefore do not allow anything to stay in the path of the gate.

The Protector System™ (Safety IR Beams) 772ANZ or GPS15 Reflector Safety IR Beams: For SAFE operation of the gate, the Protector System™ MUST BE INSTALLED and be fully functional. The gate will not operate if the Protector System™ is not functional.

44 MYQ SETUP – MYQ GATEWAY INSTALLATION (OPTIONAL) CONTINUED

WARNING: Important Safety Instructions:
Do not allow children to play near the gate, or with any gate controls, including remotes, Smartphones that has the myQ App installed.

INSTALLATION INSTRUCTIONS

A. Before You Begin

You must have – (check which scenario is relevant to this install and setup)

Scenario 1 (Already have a myQ device connected)

- A Merlin myQ compatible gate opener (All current Merlin gate openers are myQ compatible)
- The Protector System (Safety IR Beams) 772ANZ or GPS15 Reflector Safety IR Beams model

Scenario 2 (No myQ device connected)

- A Merlin myQ compatible gate opener (All current Merlin gate openers are myQ compatible)
- A router, with an active Broadband internet connection and a spare 10 Mbps Ethernet port
- myQ Gateway accessory 828AU model
- 5 VDC Power Pack (supplied with myQ Gateway)
- Ethernet Cable (supplied with myQ Gateway)
- The Protector System (Safety IR Beams) 772ANZ model or GPS15 Reflector Safety IR Beams model

B. Installation Process

- Gate Opener:
  Install the Merlin Gate Opener to a fully functional gate using the installation instructions included in this manual.
- Protector System (Safety IR Beams) 772ANZ or GPS15 Reflector Safety IR Beams:
  Install the Protector System (Safety IR Beams) 772ANZ supplied with the gate myQ Connectivity Kit or as an individual accessory.

NOTE: The Protector System (Safety IR Beams) 772ANZ must be installed and operational for myQ to operate.

myQ Gateway
Connect the myQ Gateway by following the below steps.

Step 1 – Connect & Create

- Connect to the home internet router and power (figure 1)
- Download the free myQ App by visiting the App Store or Google Play Store
- You must have a valid email address to create a myQ account Enter your information and click submit, an email will be sent to you to confirm your valid email address. If you do not get a confirming email, check your spam email folder or try creating the account again, being careful to spell the email address correctly
- When the myQ Gateway powers up, the GREEN LED and BLUE LED will blink 3 times to indicate a correct power connection and reset of the myQ Gateway. After power up, the LEDs will indicate the status of the myQ Gateway.
- If the GREEN LED is off after connecting the myQ Gateway to your router, check the Ethernet cable connection to your router. It must be in the LAN port, (normally numbered 1 – 4). If the GREEN LED is still off, try another port on your router. If you still cannot get a solid GREEN LED check your internet is ON, refer to gomerlin.com.au or gomerlin.co.nz. For further support contact Merlin Technical Support at customerservice@chamberlainanz.com.

figure 1

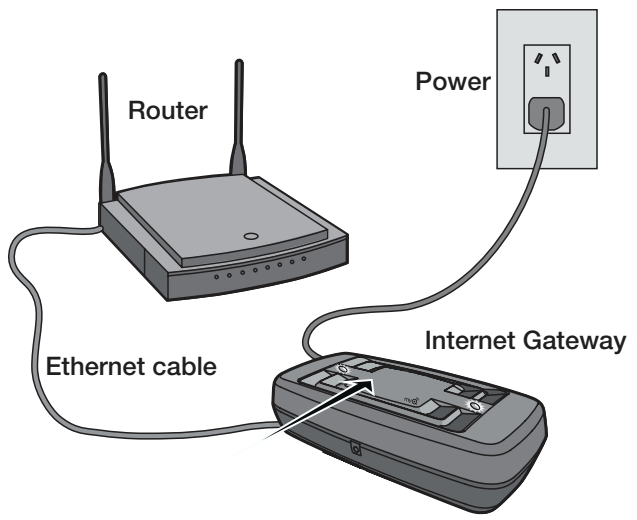

When the Internet Gateway connects to the Internet, the green LED will stop blinking and will remain on.

44 MYQ SETUP – MYQ GATEWAY INSTALLATION (OPTIONAL) CONTINUED

Step 2 – Register The myQ Gateway & Add Devices

Once you have successfully created your myQ® account, you must add the myQ® Gateway to the account. It is easy to do from your Internet enabled smartphone or tablet.

- To add the myQ® Gateway to your account, the GREEN LED on the myQ® Gateway must be on continuously. If the GREEN LED is not continuously on, see Step 1, Connect & Create. The myQ® Gateway must have an Internet connection for the phone to find it.
- Using the myQ® app, add the myQ® Gateway. Click on the plus symbol icon (bottom right corner), select “Device” then select “Internet Gateway” to add the myQ® Gateway.
- If this is the first myQ® Gateway connected to the account, the screen may already be at the step of “Register Gateway”. You will need the SERIAL NUMBER from the bottom label of the myQ® Gateway. The serial number is a series of ten characters, 0 – 9 or a – f. Be sure to use the correct characters (e.g., a zero “0” instead of an “O”) and keep the character spacing correct (XXXX-XXX-XXX).
- Name the myQ® Gateway (e.g., “123 Main Street” or “Home Sweet Home”). Click “Save and Close” to complete this step.
- You can add myQ® devices like the gate opener from the “Device Management” screen in the app. Under “HUBS”, select your Gateway, click “Add New” and select a device to add, then follow the steps to complete the set-up. Once you click NEXT you have 3 minutes to go to the gate opener and press it's learn button.
- The myQ® Gateway will pair to the opener. Once a device is programmed, it will appear on the screen. You can then name the device (e.g., front gate, etc.). The Blue LED light on the Gateway indicates an opener is paired to the Gateway.

For Troubleshooting, Diagnostics and other information, scan the below QR code:

iPhone® is a registered trademark of Apple Inc

Android™ is a registered trademark of Google Inc.

45 ERROR CODES

To reduce the risk of SEVERE INJURY or DEATH:

- **Disconnect ALL power BEFORE performing ANY maintenance.**
- **ALL maintenance MUST be performed by a professional installer.**
- **ALWAYS wear protective gloves and eye protection when changing the battery.**
- **If the supply cord is damaged, it MUST be replaced by the manufacturer, its service agent or similarly qualified persons in order to avoid hazard.**

Error	Problem	Action Required	How to Clear
ERR: APPLICATION	• AP is set to 00 • Motor application type not selected	• Check if AP is set to 00. • If yes, change to correct application setting. • Reset Basic Settings	• Press and hold 'P' for 5 seconds to open the Main menu. • Scroll though and select the correct Motor Application. • Press 'C' to confirm. • Complete Basic Settings if required. • Press and hold P to exit.
ERR: IR1 ERR: IR2 ERR: IR3	• IR# is not connected, or open circuit • IR# wire has a short circuit • IR# is connected reverse polarity • IR# is not aligned correctly • IR# is sensing an obstruction	• Check the Protector System has been installed and connected correctly. • Check the cables for any breaks or damage. • Check for a short between the IR terminals • Check polarity of the installed Protector System • Check for incorrect accessories wired into the IR terminals. • Check the Protector System for alignment or an obstruction.	• Auto reset once obstruction is clear or Protector System is realigned. (may take up to 16 seconds)
ERR: SAFETY EDGE	• The Safety Edge is not connected • The Safety Edge is not connected with an 8.2KΩ resistor • The Safety Edge has a short circuit • The Safety Edge being pressed	• Check the Safety Edge has been installed and connected correctly. • Check the 8.2KΩ resistor is connected. • Check for a short in the cabling • Check for incorrect accessories wired into the Safety Edge terminals. • Check the Safety Edge is not being pressed.	• Auto reset once Safety Edge is not pressed (may take up to 16 seconds)
ERR: STOP INPUT	• STOP switch is open • STOP Switch is not connected	• Check if the STOP switch is open circuit or damaged. • Check if the STOP switch has been disconnected. If so, reconnect, or install a small loop wire to replace the STOP switch closed contact.	• Auto reset once the issue has been resolved. (may take up to 16 seconds)
ERR: MAGNET	• Limit Switch Sensor is not connected or is connected incorrectly. • Limit Switch Magnet and Limit Switch Sensor not aligned. • The fuse is blown	• Check if the Limit Switch Sensor is connected correctly. • Check if the Limit Switch Magnet and Limit Switch Sensor are aligned. • Check if the fuse is blown.	• Auto reset once the issue has been resolved. (may take up to 16 seconds)

45 ERROR CODES

Error	Problem	Action Required	How to Clear
ERR: MOTOR1 ERR: MOTOR1	• PCB has detected a motor failure	• Power down the gate operator for 20 seconds. • Once the gate has been powered up again, check if the PCB has reset. If not, change the PCB.	• Power down for 20 seconds and power on to reset.
ERR: PCB	• PCB memory failure	• Power down the gate operator for 20 seconds. • Once the gate has been powered up again, check if the PCB has reset. If not, change the PCB.	• Power down for 20 seconds and power on to reset.
ERR: OBSTR. MOT1 ERR: OBSTR. MOT2	• Motor # is blocked and unable to move	• Check the motor is free to move. • Clear any obstruction. • Check any pivot points or track for debris jamming the motor or gate.	• Auto reset once the issue has been resolved. (may take up to 16 seconds)
ERR: MOTOR1 RPM ERR: MOTOR2 RPM	• Motor # is stalled or RPM is damaged	• Check if the motor is stalled or RPM is damaged	• Auto reset once the issue has been resolved. (may take up to 16 seconds)
ERR: RADIO	• Radio module failure	• Power down the gate operator for 20 seconds. • Once the gate has been powered up again, check if the PCB has reset. If not, change the PCB.	• Power down for 20 seconds and power on to reset.
ERR: BATTERY	• Battery Voltage is low	• Check the battery voltage • Charge battery	• Auto reset once the issue has been resolved. (may take up to 16 seconds)
ERR: SYNC	• SYNC connector is short circuited	• Check if the SYNC connector is short circuited.	• Auto reset once the issue has been resolved. (may take up to 16 seconds)
ERR: LIMITS	• Incorrectly pressing ‘C’ during limit learning	• Relearn limits • Reset basic Settings	• Relearn limits • Complete Basic Settings if required.

46 ACCESSORIES

(1)	E148M	4 Channel Wireless wall button	(13)	E850M	Wireless Keypad
(2)	E138M	Wireless Wall Button	(13)	MGBBU	Battery Backup (not shown)
(3)	E980M	4 Channel transmitter	(14)	LD000	Loop Detector (not shown)
(4)	E970M	4 Channel transmitter	(15)	V9083	E-Lock (not shown)
(5)	E960M	4 Channel transmitter	(16)	MG1300	Maglock (not shown)
(6)	E964M	4 Channel visor transmitter	(17)	CP4	Vehicle Sensing Probe (not shown)
(7)	E940M	1 Channel visor transmitter	(18)	002A2331	6 Pin Wire Harness (not shown)
(8)	E943M	3 Channel visor transmitter	(19)	Model (Vary)	Flashing Lamps (not shown)
(9)	E945M	3 Channel mini transmitter	(20)	Model (Vary)	Sounders (not shown)
(10)	E840M	Keyless entry system	(21)	PU100	Emergency Stop Switch (not shown)
(11)	772ANZ	The Protector System™	(22)	AT000	Timer (24h) (not shown)
(12)	GPS15	Reflector Safety Beams			

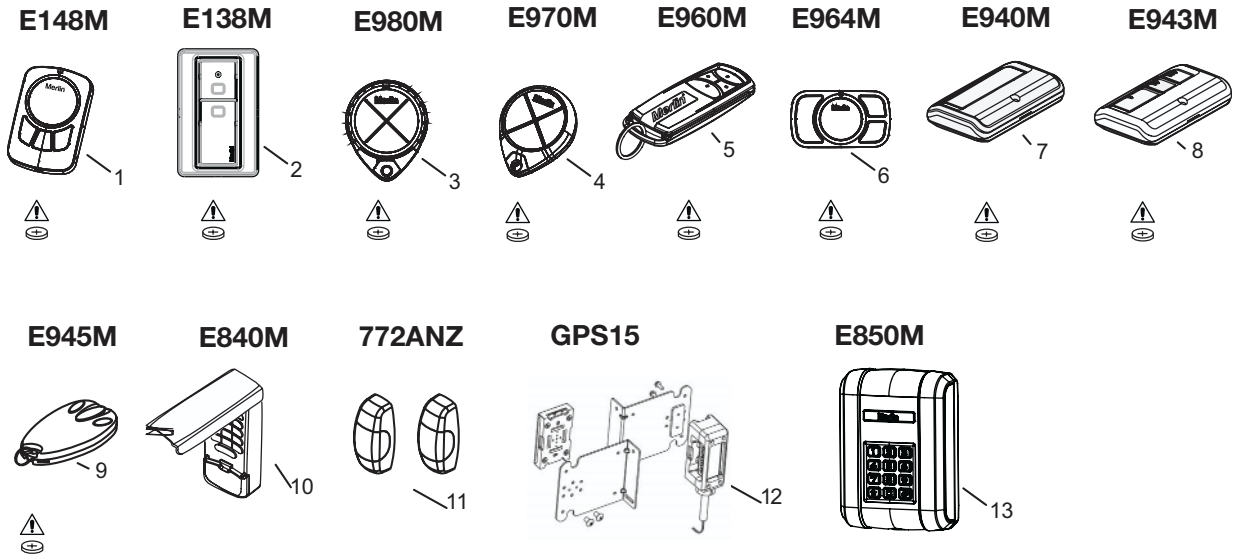

WARNING! This product contains a button/coin cell battery.

- *The battery is hazardous.*
- *Keep new and used batteries away from children.*
- *Do not ingest battery. Chemical burn hazard.*
- *If the coin cell battery is swallowed or placed inside any part of the body, it can cause severe or fatal injuries in 2 hours or less.*
- *If the battery compartment does not close securely, stop using the product and keep away from children.*
- *If you think batteries might have been swallowed or placed inside any part of the body, call the 24-hour Poisons Information Centre on 13 11 26 in Australia, or the 24-hour National Poisons Centre on 0800 764 766 in New Zealand, or seek immediate medical attention.*
- *Dispose of used coin/button cell batteries immediately and safely. Flat batteries can still be dangerous.*

47 BASIC SETTINGS - PART 1

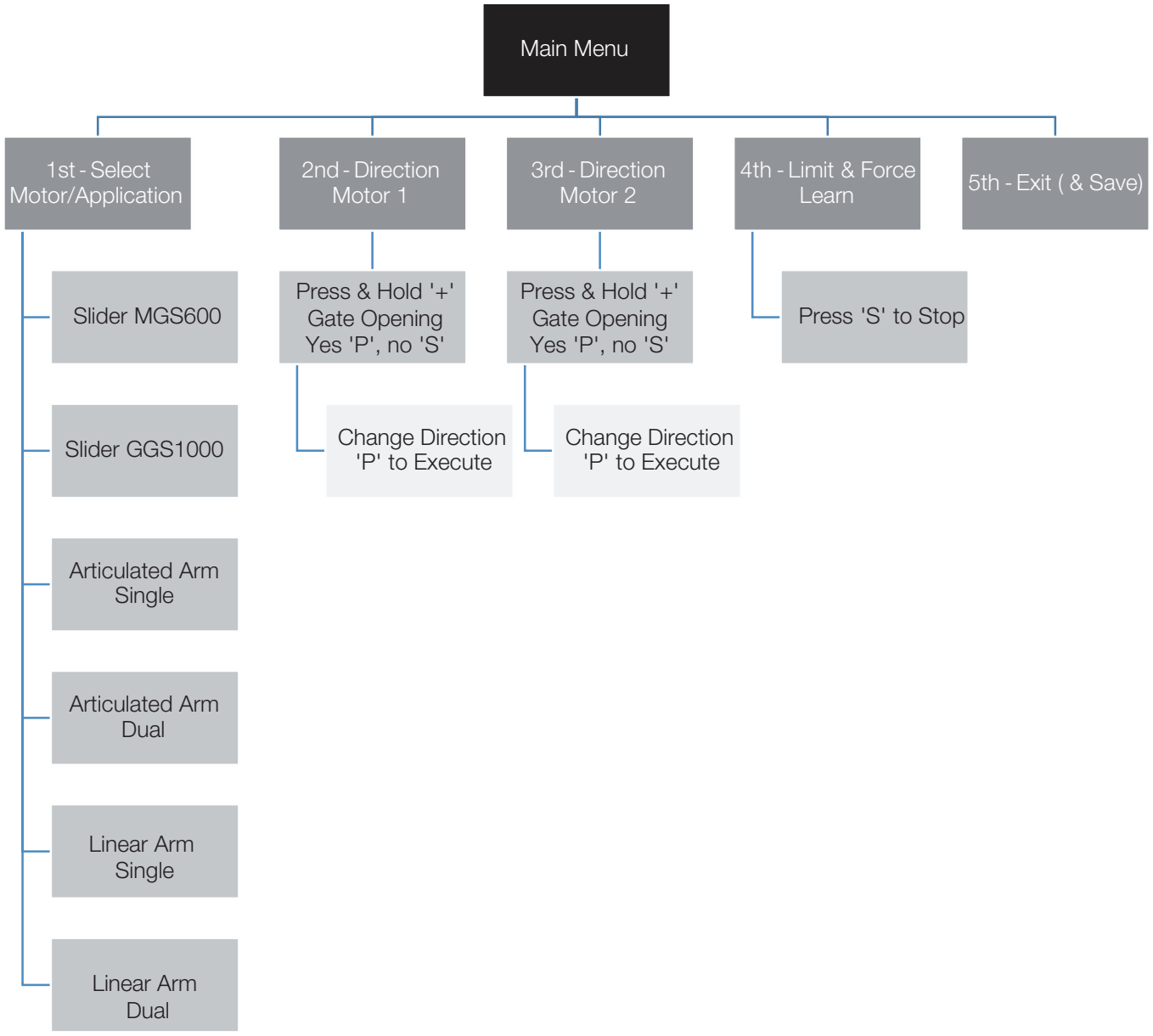

47 BASIC SETTINGS - PART 2

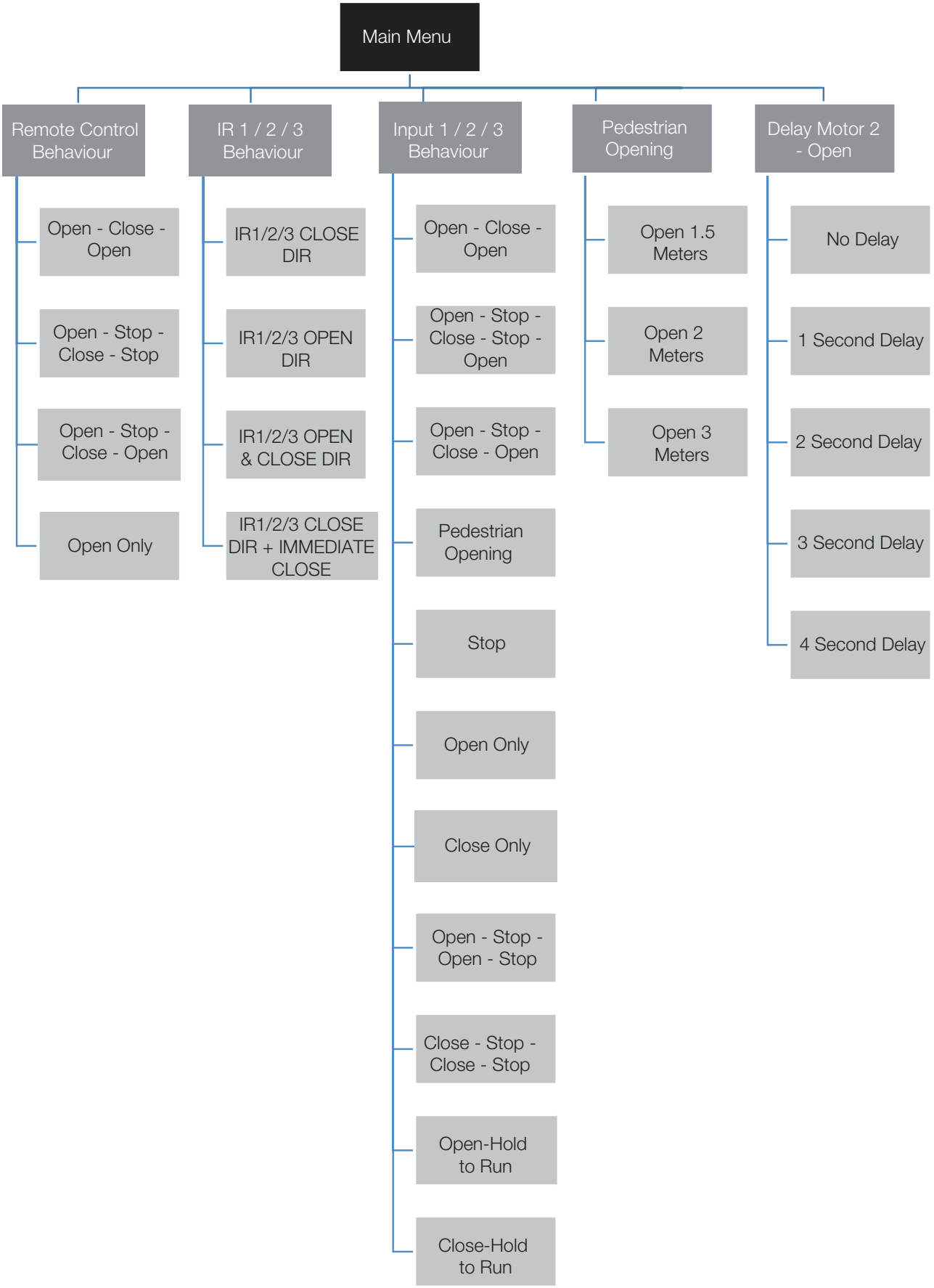

47 BASIC SETTINGS - PART 3

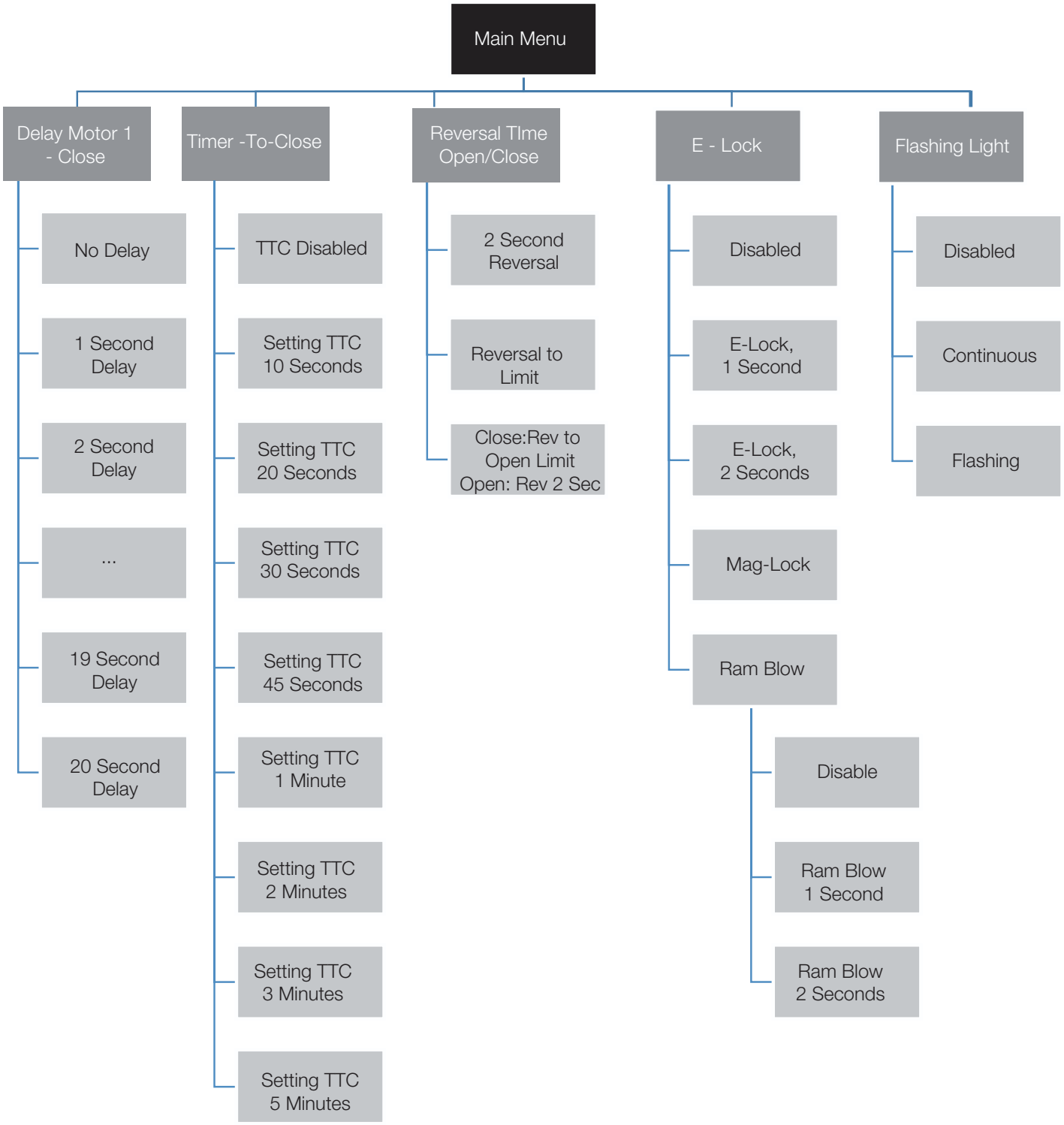

47 BASIC SETTINGS - PART 4

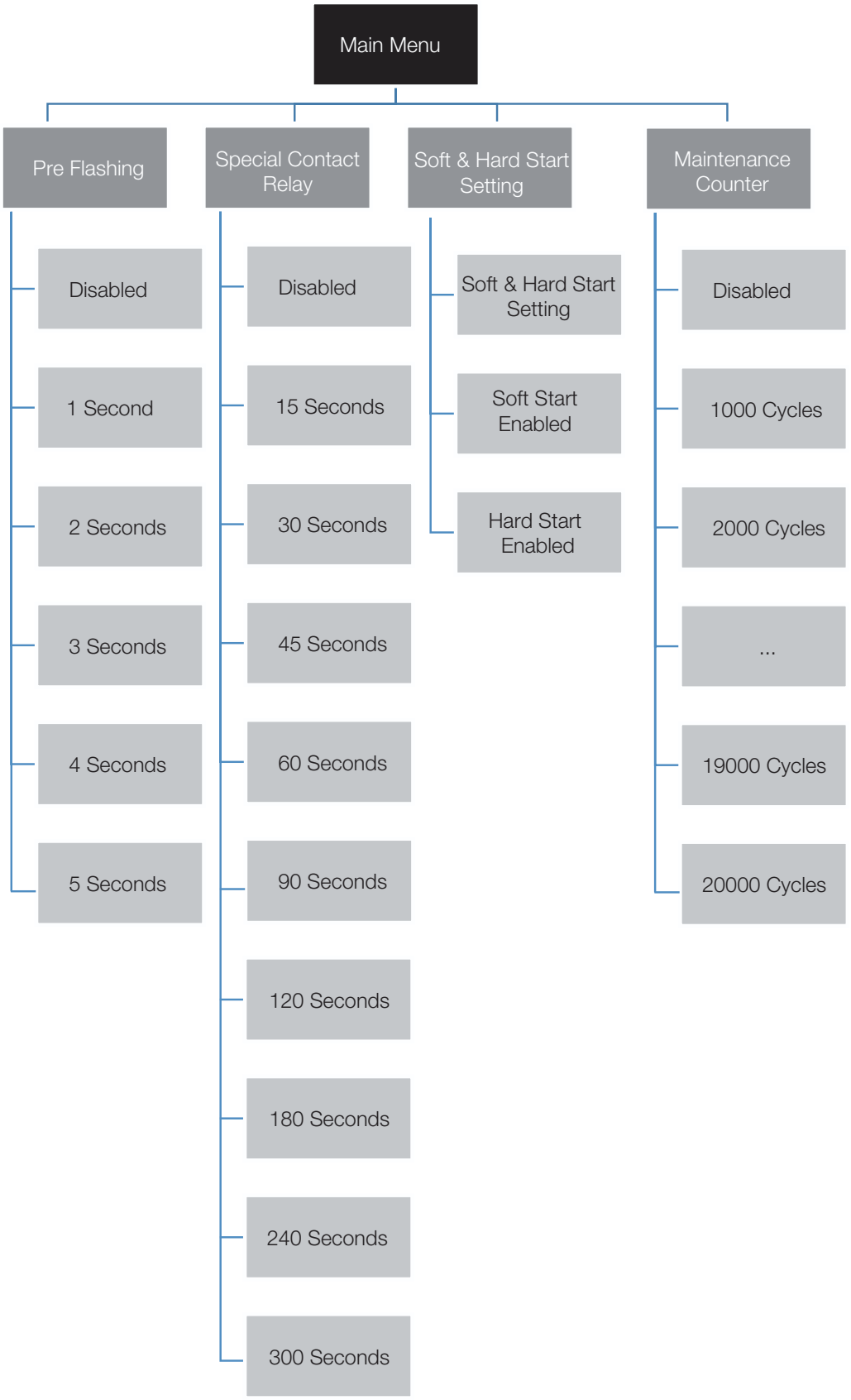

47 ADVANCED SETTINGS

Advance Settings - Fine tuning force, speed and delay settings. Note percent value is relative to learned value e.g. 'increase 15%' is a 15% increase over the learned setting.

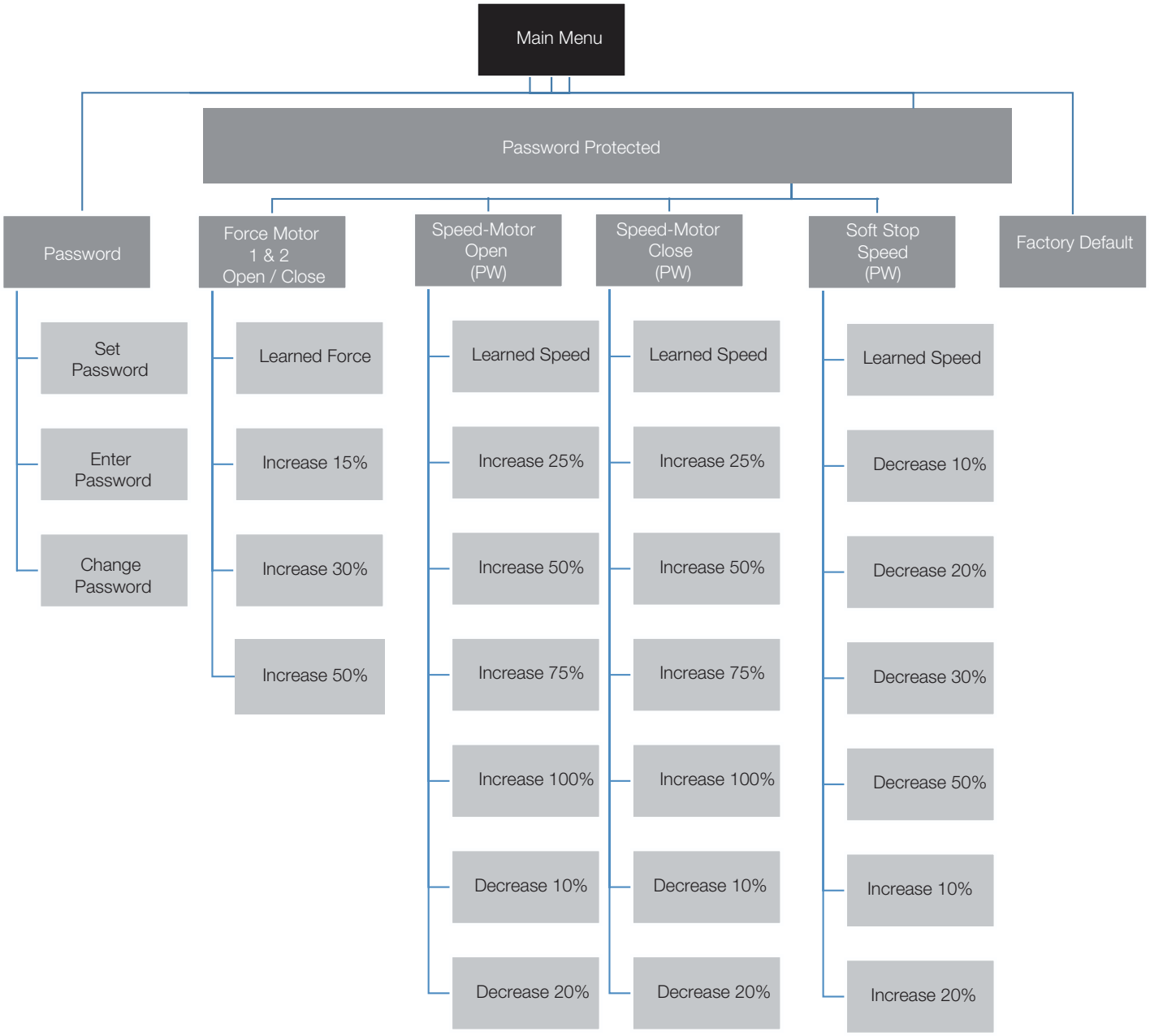

DON'T FORGET

Warranty Registration

To validate your warranty you must complete the registration form online at:

gomerlin.com.au/warranty
or
gomerlin.co.nz/warranty

Merlin®

Get Connected with myQ®

Additional purchase of the myQ Connectivity Kit is required to enable myQ functionality.

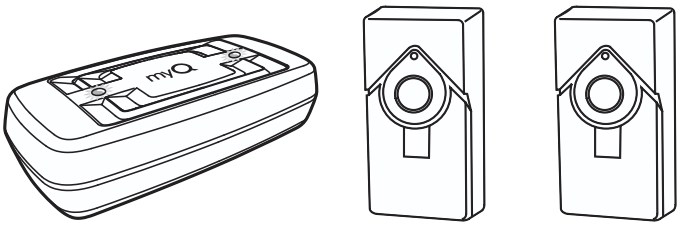

Visit www.gomerlin.com.au or www.gomerlin.co.nz for more details.

Download on the App Store

GET IT ON Google Play

™ Trademark of The Chamberlain Group, Inc.
® Registered Trademark of The Chamberlain Group, Inc
© 2021 The Chamberlain Group, Inc

WARRANTY

CHAMBERLAIN LIMITED WARRANTY

Merlin® Professional Slide 600

Slide Gate Opener

Chamberlain Australia Pty Limited / Chamberlain New Zealand Limited **(Chamberlain)**, the manufacturer of Merlin® automatic gate openers, is committed to manufacturing and supplying high quality goods. As part of this commitment, we seek to provide reliable service and support for our goods and are pleased to provide you, the original purchaser, with this Chamberlain Limited Warranty.

The benefits given to you under this Chamberlain Limited Warranty are in addition to any rights and remedies that you may have under Australian or New Zealand consumer protection laws. Our goods come with guarantees that cannot be excluded under the Australian Consumer Law, or New Zealand Consumer Guarantess Act 1993. You are entitled to a replacement or refund for a major failure and for compensation for any other reasonably foreseeable loss or damage. You are also entitled to have the goods repaired or replaced if the goods fail to be of acceptable quality and the failure does not amount to a major failure.

Chamberlain's warranty

What is covered

Chamberlain warrants to the original purchaser of the Merlin Slide Gate Opener (Unit) that all parts of the Unit, other than remote controlled transmitters, battery back up units, accessories, globes and batteries, are free from defects in materials and workmanship for a period of 36 months or 7,500 cycles (each opening & closing of the gate equals 1 cycle) whichever comes first, from the date of purchase when installed by a Professional dealer appointed or authorised by Chamberlain in a residential premise with a residential specified gate that is designed for the sole purpose of a single-family dwelling.

Chamberlain warrants that the remote controlled transmitters (E970M) included with the Unit are free from defects in materials and workmanship for a period of 24 months from the date of purchase and all other accessories included with the Unit are free from defects in materials and workmanship for a period of 12 months from the date of purchase.

What is not covered

Batteries and globes are not covered under the Chamberlain Limited Warranty.

Travel costs incurred by Chamberlain or the Professional Dealer in either travelling to or from areas outside a capital city metropolitan area. These costs will be at the purchaser's expense.

Additional access costs incurred by a Professional Dealer or Chamberlain in obtaining access where the Unit is not readily accessible. These cost will be at the purchaser's expense.

Warranty Conditions

It is a condition of this Chamberlain Limited Warranty that the Unit is sold, installed and serviced by a Professional Dealer appointed or authorised by Chamberlain. A Merlin branded garage door opener purchased over the internet and installed by a person other than a Professional Dealer will not be covered by this Chamberlain Limited Warranty.

It is also a condition of this Chamberlain Limited Warranty that for the operating life of the Unit:

1 the gate and the Unit is professionally maintained and serviced by a Professional Dealer, at a minimum, during the third year of the Chamberlain Limited Warranty period such that the spring balanced gate operates according to manufacturer specifications. If your gate binds, sticks, or is out of balance, then it must not be used until serviced by a trained gate technician or Profesional Dealer. The gate service fee will be at the purchaser's expense;

2 the warranty is registered by completing the online form at www.gomerlin.com.au or www.gomerlin.co.nz; and

3 you retain your sales docket or invoice as proof of purchase, and attach it to this manual to enable you to establish the date of purchase in the unlikely event of a warranty service being required.

Making a claim

During the applicable Chamberlain Limited Warranty period, if you are concerned that the Unit may be defective, call the Professional Dealer that sold/installed the opener, or our service centre on the toll free number below and a Chamberlain technician will diagnose the problem and arrange for this to be rectified.

Once the problem has been diagnosed, subject to your rights under the applicable Australian and New Zealand consumer protection laws with respect to major failures, Chamberlain or its Professional Dealer will provide you with either, repairs to the Unit or a replacement Unit.Repairs and replacement parts provided under this Chamberlain Limited Warranty are provided free of charge and are warranted for the remaining portion of the original warranty period.

This Chamberlain Limited Warranty provides benefits which are in addition to your other rights and remedies as a consumer.

Exclusions - what voids the warranty

If our service centre determines that a warranty claim has been made in respect of a failure or defect arising under or out of any exclusion detailed below such that the claim is not covered under this Chamberlain Limited Warranty, we may, subject to your other rights and remedies as a consumer, charge you a fee to repair, replace and/or return the Unit to you.

This Chamberlain Limited Warranty does not cover any failure of, or defect in, the Unit due to:

1 non-compliance with the instructions regarding specifications, installation, operation, maintenance and testing of the Unit or of any product with which the Unit is used;

2 any attempt by a person other than a Professional Dealer to repair, dismantle, reinstall or move the Unit to another location once it has been installed;

3 use of any copy, imitation or replica gate remotes with your Merlin Unit;

4 tampering, neglect, abuse, wear and tear, accident, electrical storm,excessive use or conditions other than normal domestic use;

5 problems with, or relating to, the gate or gate hardware;

6 problems caused by electrical faults or replacement of batteries or light bulbs, blown fuses, electrical surges, power surges or power strikes, fire, flood, rain, water, lightning or storms;

7 water or moisture ingress that causes corrosion or electrical malfunction;

8 corrosion caused by sea air if located near a waterway, beach etc; 9 fitment to a commercial door or in a commercial operating application,installation of a residential gate opener in a commercial or industrial premises other than a single-family dwelling.

10 lack of proper maintenance, service or care of the gate and Unit;

11 any unauthorised modification to the Unit; or

12 damage caused by insects, pests or other after sale damage caused by events or accidents outside Chamberlain's reasonable control and not arising under normal and standard operating conditions.

NB: A General Purpose Outlet (GPO) ie: power point must be supplied by the consumer as this electrical fitting does not form a part of the Unit (opener).

If this Chamberlain Limited Warranty does not apply, you may have rights available to you under the Australian and New Zealand consumer protection laws.

Liability – Australia only

Except as set out in the Australian Consumer Law (being Schedule 2 of the Competition and Consumer Act 2010) (as amended, consolidated or replaced):

1 all other guarantees, warranties and representations in relation to the Unit or its supply are excluded to the extent that Chamberlain can lawfully exclude them; and

2 under no circumstances will Chamberlain be liable for consequential, incidental or special damages arising in connection with the use, or inability to use, the Unit, other than those which were reasonably foreseeable as liable to result from the failure.

Liability – New Zealand only

Except as set out in the Fair Trading Act 1986 and the Consumer Guarantees Act 1993 (as amended, consolidated or replaced):

1 all other guarantees, warranties and representations in relation to the Unit or its supply are excluded to the extent that Chamberlain can lawfully exclude them; and

2 under no circumstances will Chamberlain be liable for consequential, incidental or special damages arising in connection with the use, or inability to use, the Unit, other than those which were reasonably foreseeable as liable to result from the failure.

Note

Chamberlain reserves the right to change the design and specifications of the Unit without prior notification. Some features or accessories of the Unit may not be available in certain markets or areas. Please check with your distributor.

Chamberlain service centre contact details

Australia

Phone toll free 1800 474 326
Fax toll free 1800 888 121
Unit 1, 75 Epping Road North Ryde, NSW 2113
Website www.gomerlin.com.au
Email customerservice@chamberlainanz.com

New Zealand

Auckland phone 09 477 2823
Phone toll free 0800 653 667
Fax toll free 0800 653 663
Website www.gomerlin.co.nz