L854200350
07/2023 R1

TOM

TOM.3024E - TOM.5024E

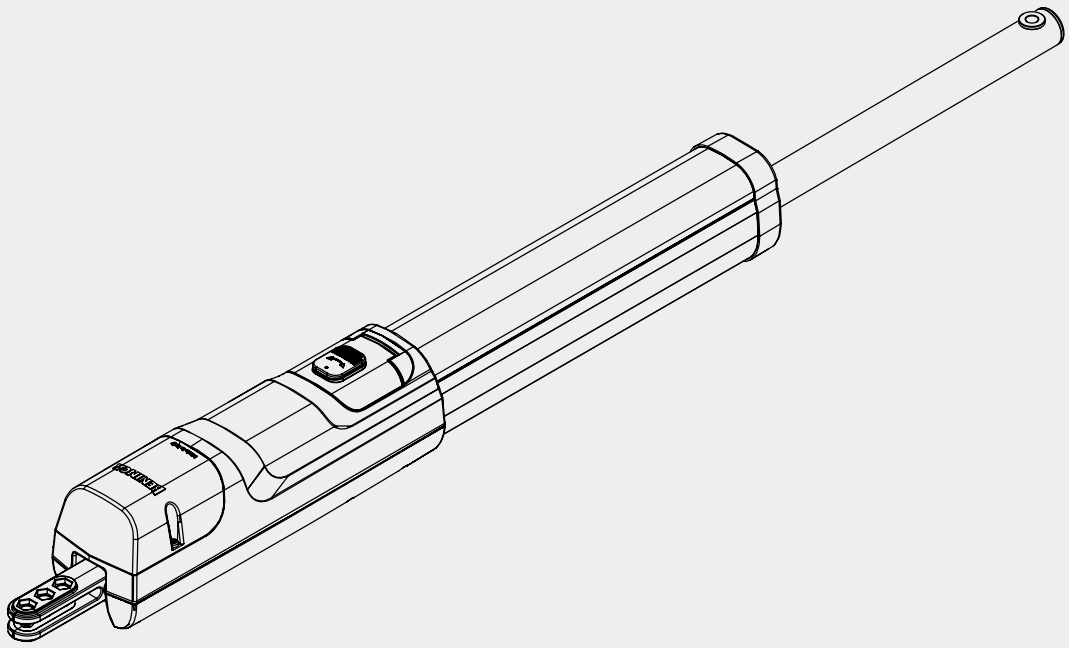

Manuale di installazione, uso e manutenzione
Installation, User and Maintenance Manual
Handbuch für Installation, Betrieb und Wartung
Manuel d'installation, d'utilisation et d'entretien
Manual de instalación, uso y mantenimient
Instrukcja instalacji, obsługi i konserwacji o

BENINCÀ®
TECHNOLOGY TO OPEN

CE UK CA

UNIONE NAZIONALE COSTRUTTORI
AUTOMATISMI PER CANCELLI, PORTE
SERRANDE ED AFFINI

UNAC

1

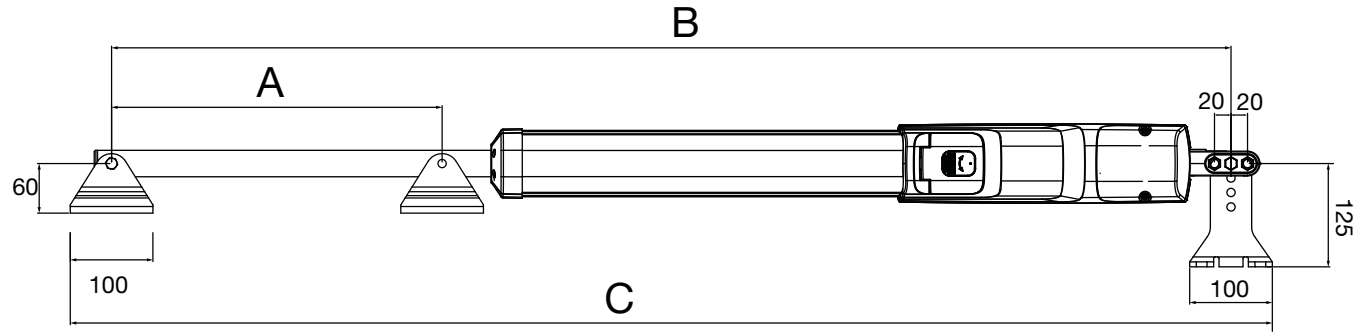

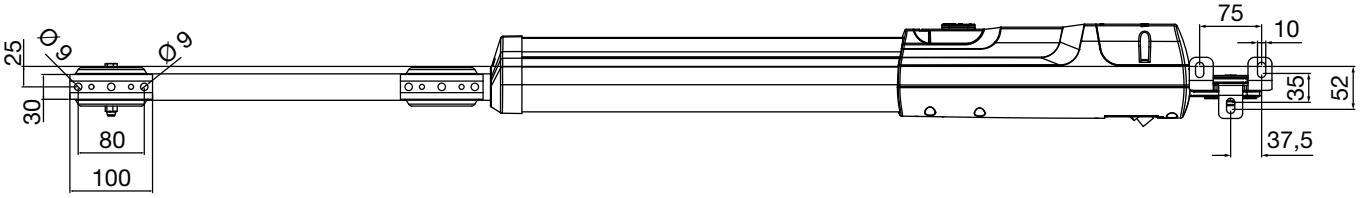

MOD.	A	B	C
TOM30M/TOM30ME/TOM3024E	300	1175	1275
TOM40M/TOM4024E	400	1375	1475
TOM50M/TOM5024E	500	1575	1675

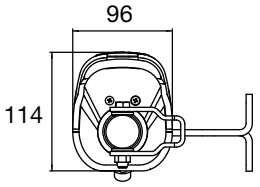

2

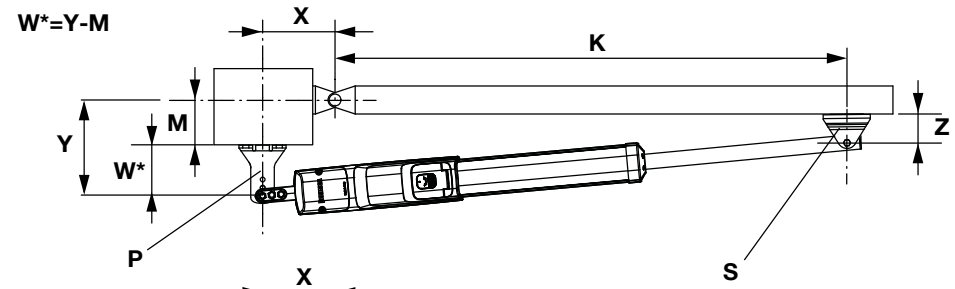

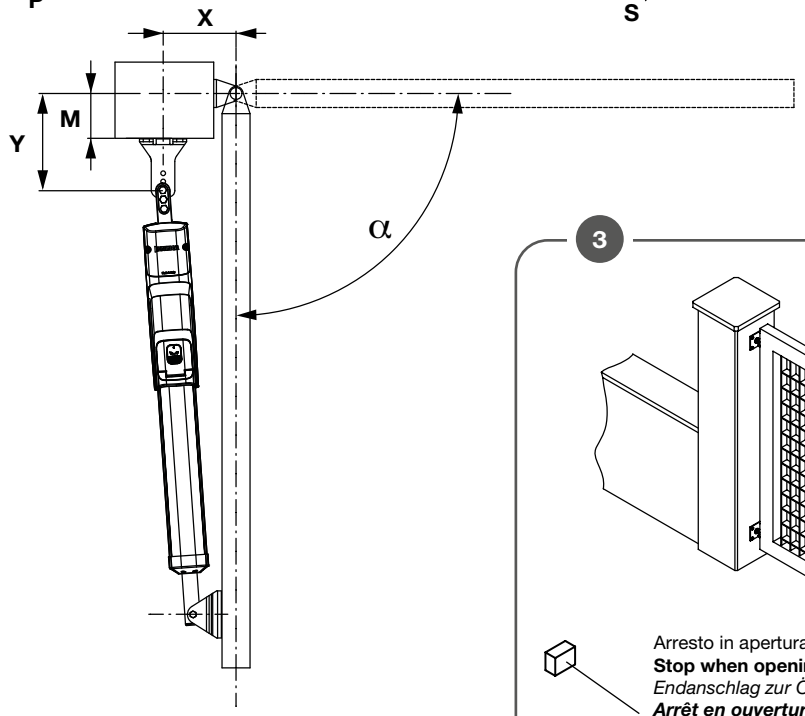

3

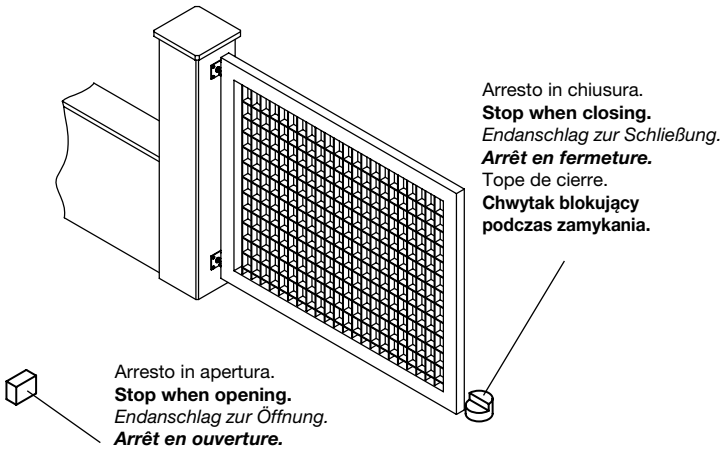

TOM30M/TOM30ME/TOM3024E							
α	X (mm)	Y (mm)	Z min (mm)	K (mm)	M max (mm)	Opening Time TOM30M-TOM30ME (sec)	Opening Time TOM3024ME (sec)
90°	**100**	**182,5**	**60**	**1070**	**110**	**18**	**11**
90°	**150**	**150**	**60**	**1023**	**25**	**18**	**11**
102°	**125**	**125**	**60**	**1048**	**25**	**18**	**11**
100°	110	80	60	1065	50	14	8.5
110°	125	125	60	1049	70	16	10
104°	135	135	60	1038	70	17	10.4
98°	140	140	60	1033	80	18	11
92°	200	100	60	975	45	18	11
94°	145	145	60	1028	85	18	11
91°	175	125	60	999	65	18	11
90°	150	150	60	1023	90	18	11

TOM40M/TOM4024E							
α	X (mm)	Y (mm)	Z min (mm)	K (mm)	M max (mm)	Opening Time TOM40 (sec)	Opening Time TOM4024ME (sec)
90°	**110**	**272,5**	**60**	**1250**	**200**	**24**	**14.7**
90°	**200**	**200**	**60**	**1169**	**75**	**24**	**14.7**
110°	**150**	**150**	**60**	**1223**	**25**	**20.6**	**12.6**
90°	200	200	60	1170	130	24	14.7
100°	175	175	60	1196	110	23	14
98°	150	225	60	1217	100	24	14.7
100°	120	190	60	1250	130	20	12.2
105°	110	110	60	1265	80	15	9.2
100°	150	200	60	1220	130	23	14
102°	150	175	60	1221	110	21	12.8
89°	175	225	60	1192	150	24	14.7
105°	150	150	60	1223	90	21	12.8
105°	200	150	60	1173	90	24	14.7
106°	200	150	60	1173	40	24	14.7
114°	200	130	60	1173	40	24	14.7
120°	200	100	60	1174	40	23	14

TOM50M/TOM5024E							
α	X (mm)	Y (mm)	Z min (mm)	K (mm)	M max (mm)	Opening Time TOM50M (sec)	Opening Time TOM5024ME (sec)
90°	250	250	60	1315	150	30	18.3
103°	250	200	60	1320	150	30	18.3
100°	200	200	60	1370	130	26	15.9
105°	200	150	60	1373	90	24	14.6
110°	200	130	60	1374	65	23	14
120°	200	100	60	1374	45	23	14
90°	**200**	**272,5**	**60**	**1362**	**200**	**30**	**18.3**
90°	**250**	**250**	**60**	**1315**	**125**	**30**	**18.3**
105°	**150**	**150**	**60**	**1423**	**25**	**23.5**	**14.4**

Le quote evidenziate non richiedono il taglio della staffa P
The highlighted dimensions do not require cutting the bracket P
Bei den hervorgehobenen Abmessungen muss die Halterung nicht zugeschnitten werden P
Les dimensions mises en évidence ne nécessitent pas de couper le support P
Las dimensiones resaltadas no requieren cortar el soporte P
Podkreślone wymiary nie wymagają przycinania wspornika P

5

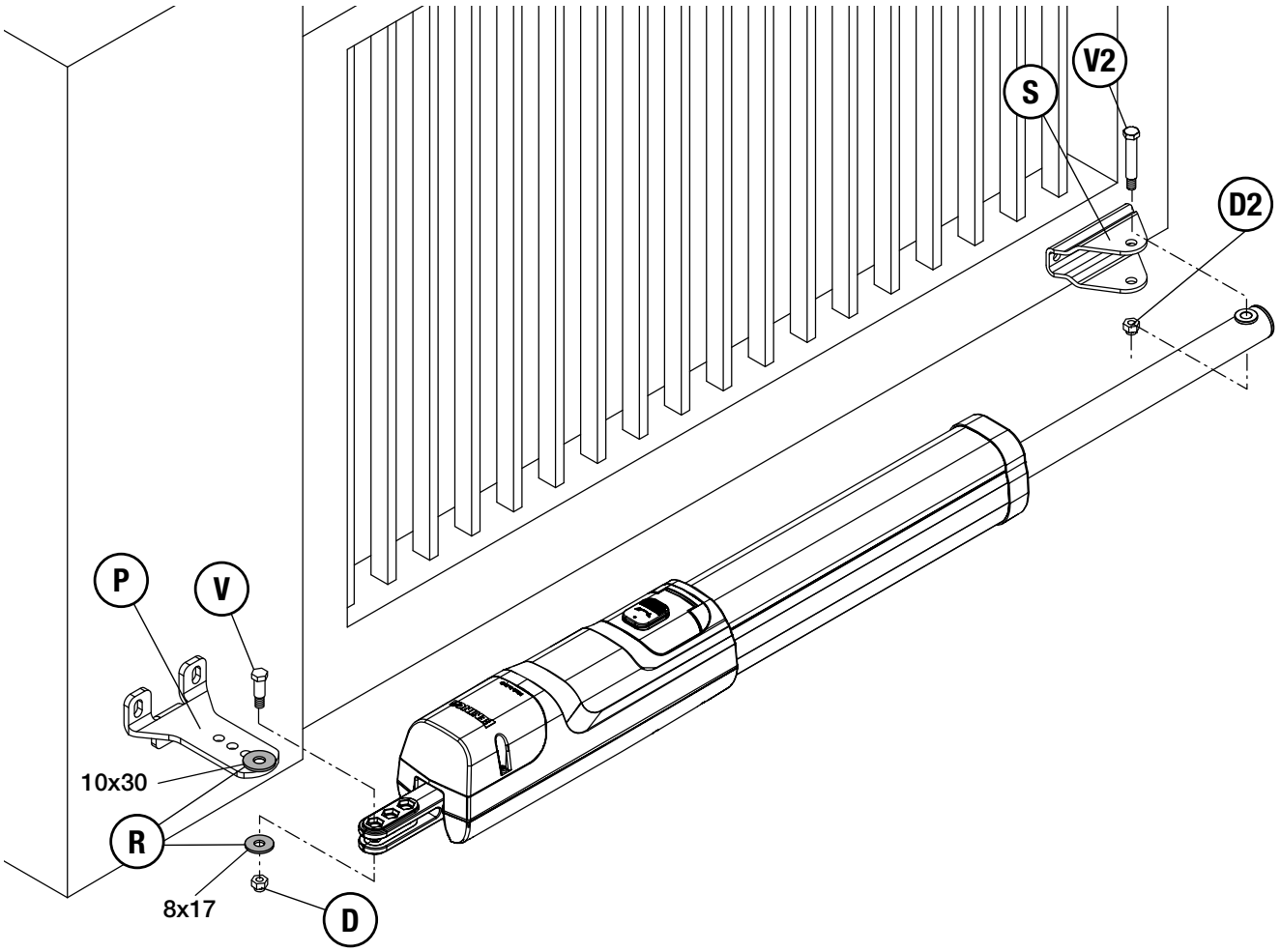

6

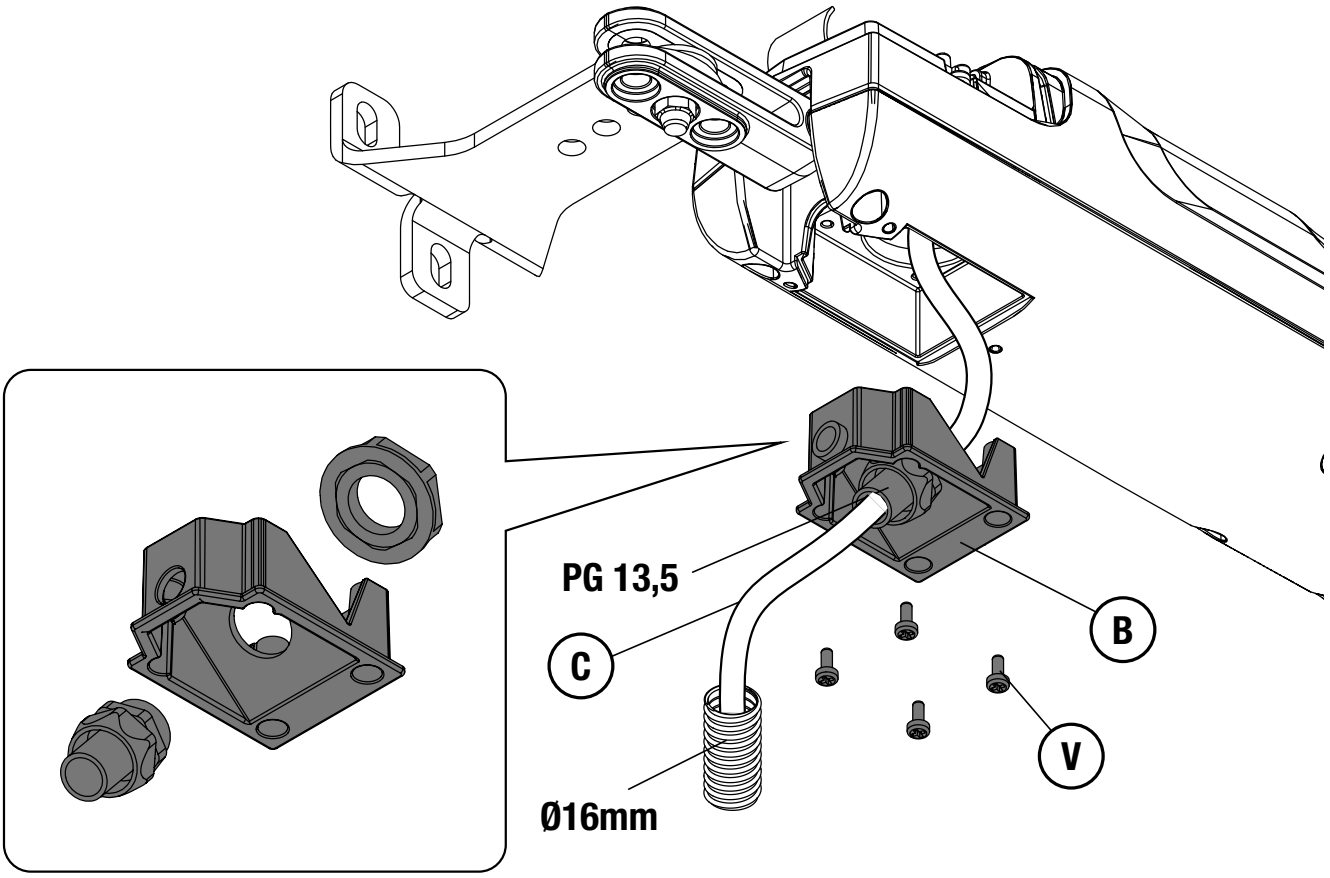

7

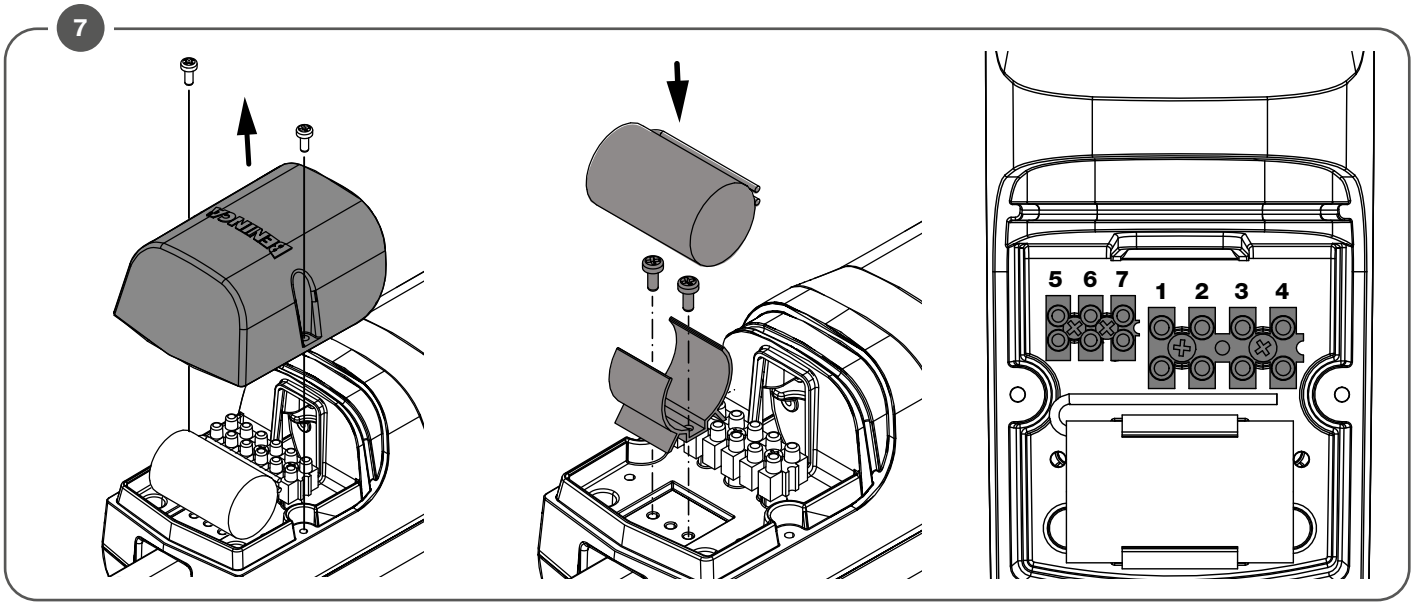

8

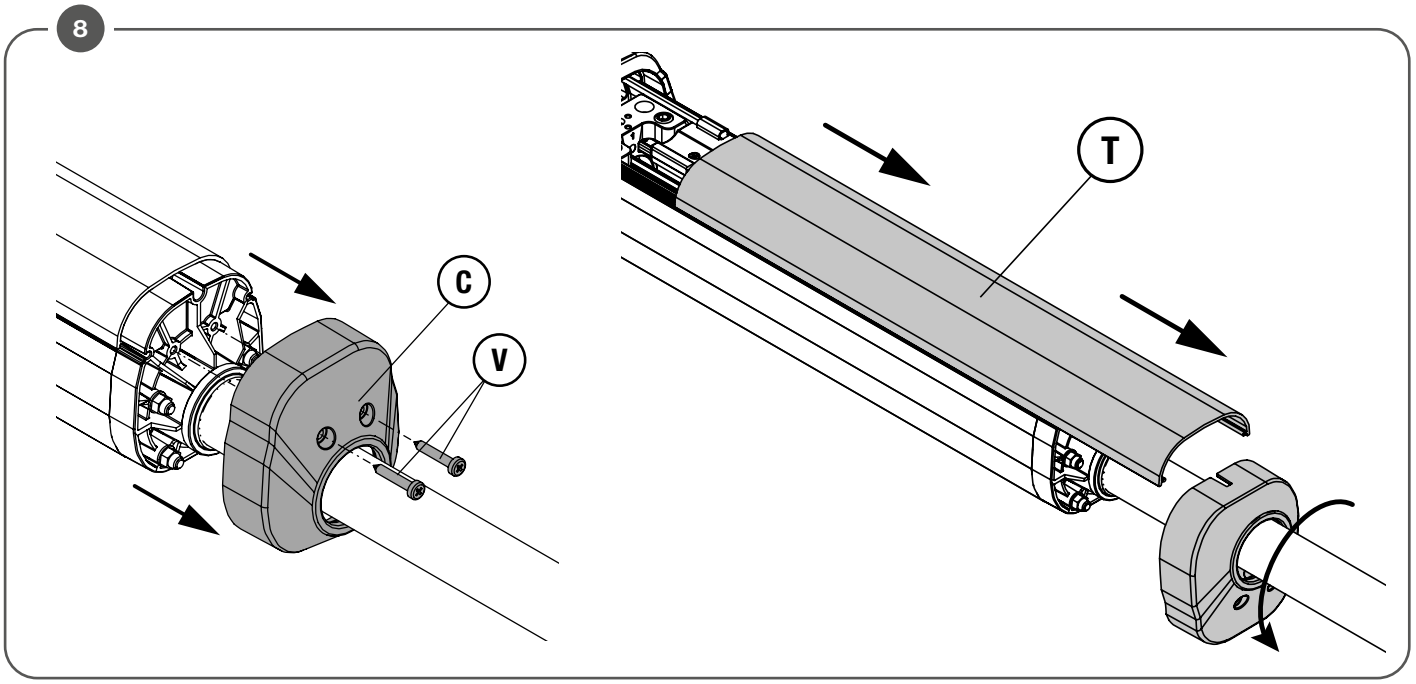

9

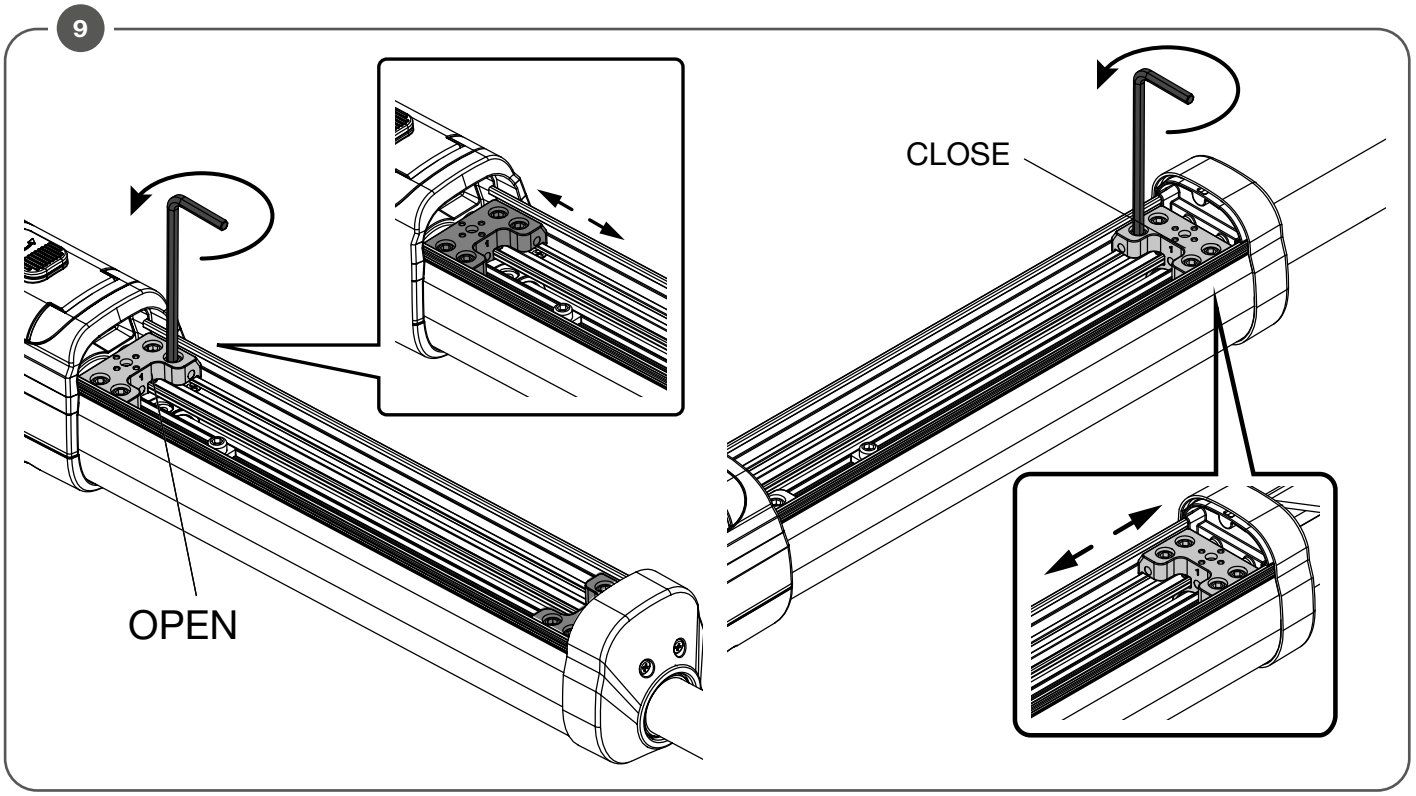

10

TOM.30M - TOM.40M - TOM.50M | **TOM.30ME** | **TOM.3024E - TOM.4024E - TOM.5024E**

230Vac

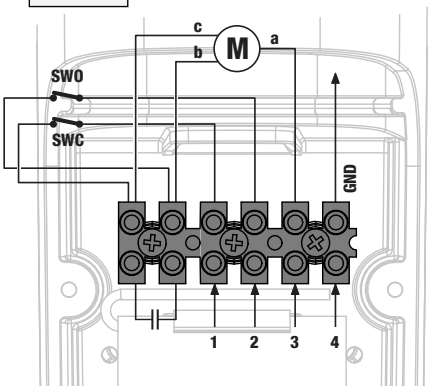

230Vac ENC

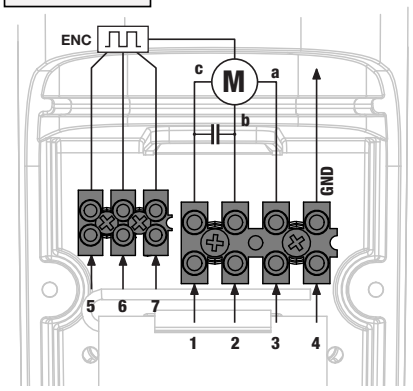

24Vdc ENC

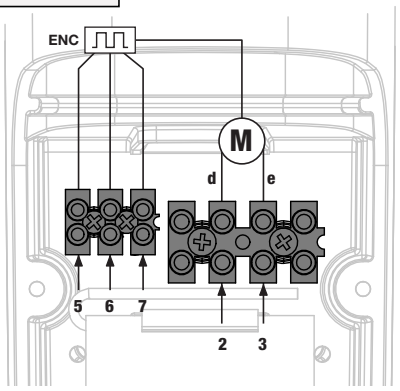

1	Chiude	Close	Schließen	Ferme	Cierra	Zamyka
2	Apre	Open	Öffnen	Ouvre	Abre	Otwiera
3	COM	COM	COM	COM	COM	COM
4	GND	GND	GND	GND	GND	GND
5	Segnale ENCODER Filo Verde	ENCODER signal Green wire	ENCODER-Signal Grün Leiter	Signal ENCODEUR Fil vert	Señal ENCODER Hilo verde	Sygnał ENKODERA Zielony przewód
6	Positivo ENCODER Filo Marrone	ENCODER positive Brown wire	ENCODER Pluspol Braun Leiter	Positif ENCODEUR Fil brun	Positivo ENCODER Hilo marrón	Dodatni ENKODERA Brązowy przewód
7	Negativo ENCODER Filo Bianco	ENCODER negative White wire	ENCODER Minuspol Weiß Leiter	Négatif ENCODER Fil blanc	Negativo ENCODER Hilo blanco	Ujemny ENKODERA Biały przewód
a	Filo nero	Black wire	Schwarzer Leiter	Fil noir	Hilo negro	Czarny przewód
b	Filo bianco	White wire	Weißer Leiter	Fil blanc	Hilo blanco	Biały przewód
c	Filo rosso	Red wire	Roter Leiter	Fil rouge	Hilo rojo	Czerwony przewód
d	Filo blu	Blue wire	Blau Leiter	Fil Bleu	Hilo azul	Niebieski przewód
e	Filo marron	Brown wire	Braun Leiter	Fil Brun	Hilo marrón	Brązowy przewód
SWC	Finecorsa CHIUDE	CLOSE limit switch	Endschalter SCHLIESSEN	Fin de course FERME	Final de carrera CIERRA	Ogranicznik ZAMYKA
SWO	Finecorsa APRE	OPEN limit switch	Endschalter ÖFFNEN	Fin de course OUVRE	Final de carrera ABRE	Ogranicznik OTWIERA

11

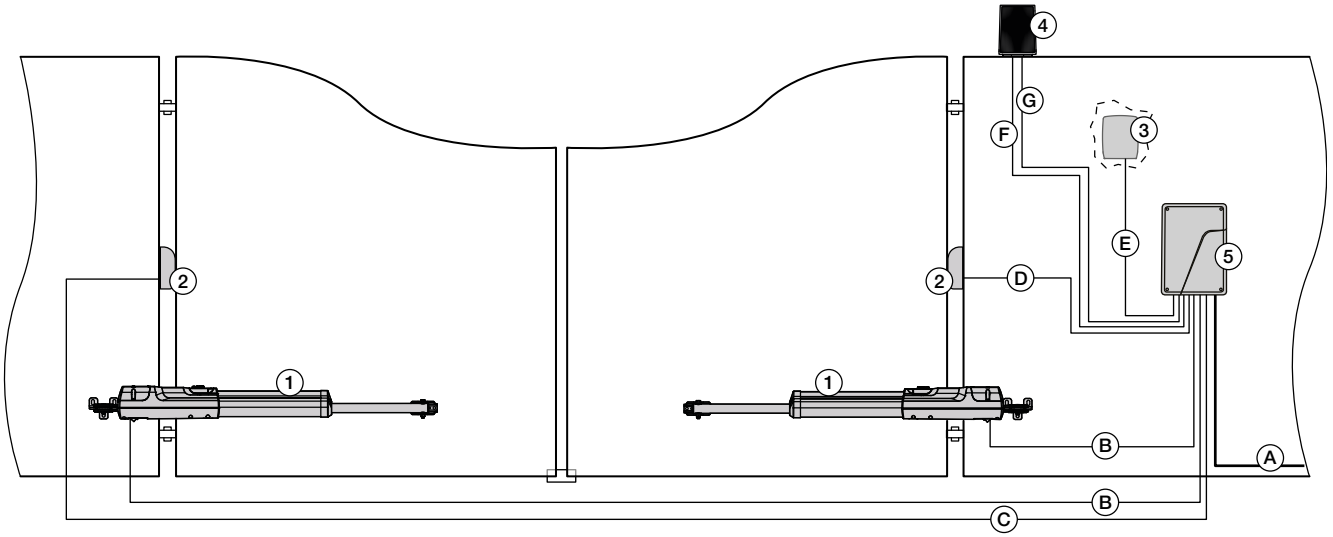

12

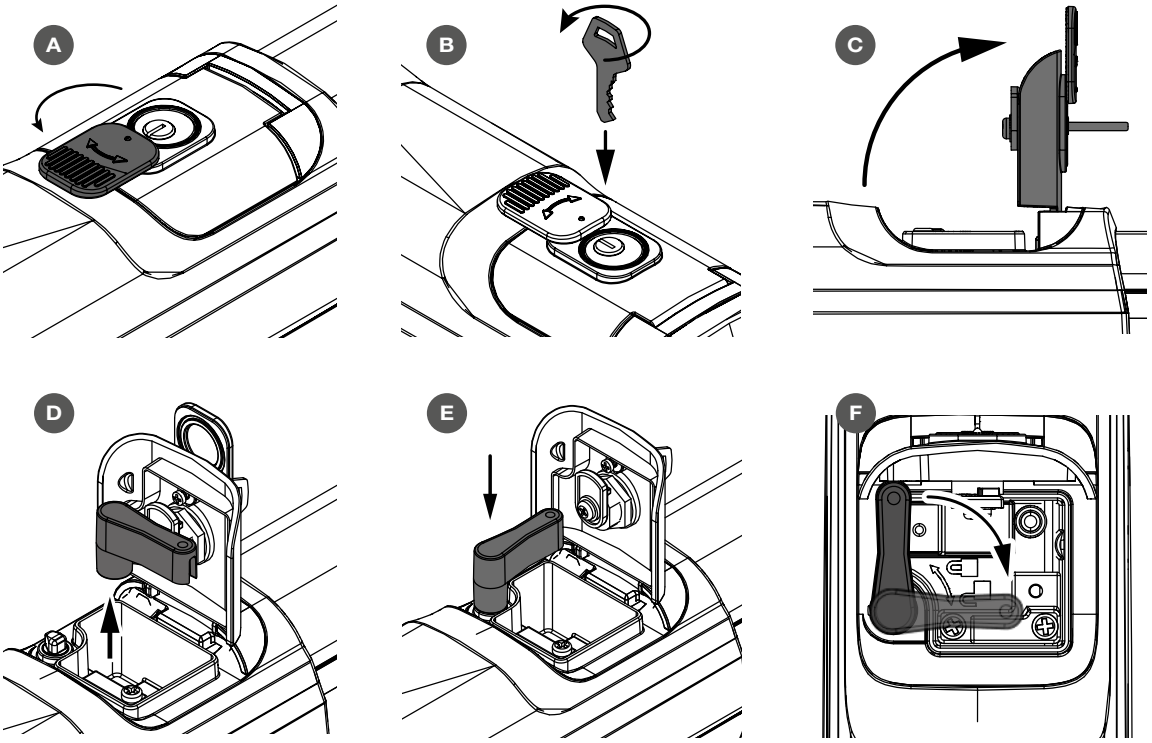

WARNING

The product shall not be used for purposes or in ways other than those for which the product is intended for and as described in this manual. Incorrect uses can damage the product and cause injuries and damages.
The company shall not be deemed responsible for the non-compliance with a good manufacture technique of gates as well as for any deformation, which might occur during use. Keep this manual for further use.

This manual has been especially written to be use by qualified fitters. Installation must be carried out by qualified personnel (professional installer, according to EN 12635), in compliance with Good Practice and current code. Make sure that the structure of the gate is suitable for automation. The installer must supply all information on the automatic, manual and emergency operation of the automatic system and supply the end user with instructions for use.

Packaging must be kept out of reach of children, as it can be hazardous. For disposal, packaging must be divided the various types of waste (e.g. carton board, polystyrene) in compliance with regulations in force.
Do not allow children to play with the fixed control devices of the product. Keep the remote controls out of reach of children.
This product is not to be used by persons (including children) with reduced physical, sensory or mental capacity, or who are unfamiliar with such equipment, unless under the supervision of or following training by persons responsible for their safety. Apply all safety devices (photocells, safety edges, etc.) required to keep the area free of impact, crushing, dragging and shearing hazard.
Bear in mind the standards and directives in force, Good Practice criteria, intended use, the installation environment, the operating logic of the system and forces generated by the automated system.
Installation must be carried out using safety devices and controls that meet standards EN 12978 and EN 12453.
Only use original accessories and spare parts, use of non-original spare parts will cause the warranty planned to cover the products to become null and void.
All the mechanical and electrical parts composing automation must meet the requirements of the standards in force and outlined by CE marking.

An omnipolar switch/section switch with remote contact opening equal to, or higher than 3mm must be provided on the power supply mains.
Make sure that before wiring an adequate differential switch and an overcurrent protection is provided.
Pursuant to safety regulations in force, some types of installation require that the gate connection be earthed.
During installation, maintenance and repair, cut off power supply before accessing to live parts. Also disconnect buffer batteries, if any are connected.
The electrical installation and the operating logic must comply with the regulations in force.
The leads fed with different voltages must be physically separate, or they must be suitably insulated with additional insulation of at least 1 mm. The leads must be secured with an additional fixture near the terminals.
During installation, maintenance and repair, interrupt the power supply before opening the lid to access the electrical parts
Check all the connections again before switching on the power.
The unused N.C. inputs must be bridged.

WASTE DISPOSAL
As indicated by the symbol shown, it is forbidden to dispose this product as normal urban waste as some parts might be harmful for environment and human health, if they are disposed of incorrectly.
Therefore, the device should be disposed in special collection platforms or given back to the reseller if a new and similar device is purchased. An incorrect disposal of the device will result in fines applied to the user, as provided for by regulations in force.

Descriptions and figures in this manual are not binding. While leaving the essential characteristics of the product unchanged, the manufacturer reserves the right to modify the same under the technical, design or commercial point of view without necessarily update this manual.

1) DESTINATION OF USE

This product is destined exclusively for the opening and closure of swing doors for the passage of vehicles, characterised by dimensional limits and weight as indicated in this manual in the “Limits of use” paragraph.

No other use is allowed.

Automatismi Benincà is not liable for uses that are not in compliance with those indicated in these instructions.

2) LIMITS OF USE

Table indicates the maximum values (weight by leaf length) acceptable for the TOM automation

Door leaf width	TOM.30M / TOM.30ME / TOM.3024E	TOM.40M / TOM.4024E	TOM.50M / TOM.50ME / TOM.5024E
2.0 m	500 kg	600 kg	700 kg
2.5 m	400 kg	500 kg	600 kg
3.0 m	300 kg	400 kg	500 kg
3.5 m		350 kg	400 kg
4.0 m		300 kg	350 kg
4.5 m			300 kg
5.0 m			250 kg

3) INTRODUCTION

- Before installing the system, read the instruction herein.
- It is mandatory not to use the **TOM** item for applications different from those indicated in the instructions herein.
- Supply the end user with instructions for using this system.
- The end user should receive special instruction manual.

4) PRELIMINARY CHECKS

It is indispensable to carry out several checks before starting installation:

- Try and open the gate manually, the leaves must move without effort and without points of resistance for the entire run.
- When left in any intermediate position the leaf must not move.
- The hinges and components subject to wear must be in perfect working condition. If this is not the case, replace the faulty parts.
- The door structure must be strong and the leaves rigid.
- With the gate completely closed, check that the leaves are aligned perfectly along their entire length.
- The pillars supporting the leaves must be suitable for fixing the gear motors.

Figure 1 shows the main overall dimensions.
Different versions are available with 300/400/500mm stroke (Fig.1 ref. A).
230 and 24 V versions with encoder or electromechanical limit switches are also available (see Technical Data table).
TOM has adjustable mechanical stops both in opening and closing. However, a stop for closure on the ground is recommended (fig.3).

The reliability and safety of the automation depend on the state of the gate structure.
Check that there is enough space for installation of the operator in safe and comfortable conditions.

5) FITTING THE AUTOMATIC SYSTEM

Stabilise the height of the automatic system above ground level (it should be as central as possible with respect to the gate and corresponding to a sturdy cross piece).
Then weld the plate P (fig. 5) respecting the distances in fig. 2 and 4.
When the gate is closing, weld the bracket S(Fig.5) respecting the distance in fig. 2/4, onto a cross piece of the gate or another suitably robust element; bear in mind that in this condition the actuator must not be completely at the end of travel.
After fixing plate P and bracket S, proceed with fixing the actuator using screw V and nut D (fig.5) for fixing to the pillar.
IMPORTANT: Insert washers R (9x17 and 10x30) as shown in Figure 5.
For fixing to bracket S use screw V2 and nut D.
Note:
Bracket P and its bracket on the actuator have different bore holes to allow for different fixing dimensions.
Most of the installation dimensions in Fig. 2 require the bracket P to be cut, some dimensions that do not require cutting are highlighted

6) HOW TO ADJUST THE MECHANICAL STOPPERS

The actuator is provided with adjustable mechanical stoppers in the opening and closing phases.
The system is adjusted by suitably positioning the “Open” and “Close” mechanical locks, as shown hereunder (Fig.8/9):
1) Remove the two screws V (Fig.7) and remove the cover and rotate it 180, so that the cover T can be removed.
2) Unlock the automation, using the special release lever, as indicated in the "EMERGENCY MANOEUVRE" paragraph.
3) Move the leaf to the OPEN position.
4) Loosen the Vo screws (hexagonal spanner size 5) and move the "OPEN" block until it comes to a stop, fasten the Vo screws.
5) Move the sash to the CLOSED position.
6) Loosen screws Vc and move the "CLOSE" block until it stops, fasten screws Vc.
7) Resume automatic operation.

ATTENTION: In the TOM 30M/40M/50M models, the electromechanical limit switches are integral with the mechanical block

7) ELECTRICAL CONNECTIONS

1) The special plate P (Fig. 6) allows for using a link for sheath or cable gland r PG13,5.
Once the type of cable gland is applied to the plate, fix the latter to the adaptor cover by means of screws V.
n the 230V versions, after carrying out the wiring, fasten the capacitor using the appropriate support shown in Fig.7.
Figure 10 shows the connections for the various TOM models.
2) **It is <u>mandatory</u> to provide for ground by using the special GND terminal.**

8) EXAMPLE INSTALLATION

The cables necessary for the installation of TOM can vary according to the accessories installed.
No connection cable is supplied.
Fig. 11 indicates the cables for standard installation.

List of cables		
	Connection	**Type**
A	Mains power supply to the control unit	3x1,5mm²
B	Motor connection	TOM 30M/40M/ 50M: 4x1,5mm² + 2x0,5mm² (SWO/SWC) TOM 30E: 4x1,5mm² + 3x0,5mm² (ENCODER) TOM 30ME/40ME/ 50ME: 3x1,5mm² + 3x0,5mm² (ENCO-DER)
C	Photocell transmitter connection	2x1,0mm²
D	Photocell receiver connection	4x1,0mm²
E	Key selector connection for external command	2x1,0mm²
F	Flashing signal light connection	2x1,5mm²
G	Connection of the aerial built-in the flashing light	RG 58

Legenda	
1	Motoreducer
2	Photo-electric cells
3	Key selector (external) or digital keyboard
4	Flash-light
5	Electronic board

⚠	**The cables used must be suitable for the type of connection. For example, for connection protected by raceways use H03VV-F cables, for cables in the outdoor environment always use the H07RN-F type.**

9) MANUAL AND EMERGENCY MANOEUVRE (FIG.12)

In the event of a power cut or breakdown, proceed as follows to operate the wings manually (refer to figures A*,B*,C,D,E):

- Rotate the protective door (fig. A*)
- After inserting the customized key C, turn it anti-clockwise (fig. B*)
- Open the protective flap of the release mechanism (Fig. C) and pull out the supplied release key (Fig. D).
- Insert the special release key supplied (fig. E) and turn it 90°, as shown in fig. F.
- It is now possible to open/close the wing manually.
- To restore automatic operation, return the release key to its initial position.
- Remove the release lever and close the protective door.

TECHNICAL DATA	TOM.30M	TOM.40M	TOM.50M	TOM.30ME	TOM.40ME	TOM.50ME	TOM.3024E	TOM.4024E	TOM.5024E
Power supply	230Vac 50/60Hz						24 Vdc		
Absorbed current	1 A						0.7 A		
Thrust	2000 N						1500 N		
Jogging	30%						Intensive		
Protection degree	IP44								
Operating temperature	-20°C / +50°C								
Capacitor	9 µF						-		
Useful stroke	300mm	400mm	500mm	300mm	400mm	500mm	300mm	400mm	500mm
Noise level	<70 dB								
Lubrification	Permanent grease								
Opening time 90°	18s	24s	30s	18s	24s	30s	11s (24V)	15s (24V)	19s (24V)
Mechanical stops	Open/Close								
Encoder	no			si					
Limit switch	si			no					

Safety rules	• Do not stand in the movement area of the gate. • Do not let children play with controls and near the gate. • Should operating faults occur, do not attempt to repair the fault but call a qualified technician.
Manual and emergency manoeuvre	In the event of a power cut or breakdown, proceed as follows to operate the wings manually (refer to figures A*,B*,C,D,E): • Rotate the protective door (fig. A*) • After inserting the customized key C, turn it anti-clockwise (fig. B*) • Open the protective flap of the release mechanism (Fig. C) and pull out the supplied release key (Fig. D). • Insert the special release key supplied (fig. E) and turn it 90°, as shown in fig. F. • It is now possible to open/close the wing manually. • To restore automatic operation, return the release key to its initial position. • Remove the release lever and close the protective door.
Manteinance	• Every month check the good operation of the emergency manual release. • It is mandatory not to carry out extraordinary maintenance or repairs as accidents may be caused.These operations must be carried out by qualified personnel only. • The operator is maintenance free but it is necessary to check periodically if the safety devices and the other components of the automation system work properly. Wear and tear of some components could cause dangers.

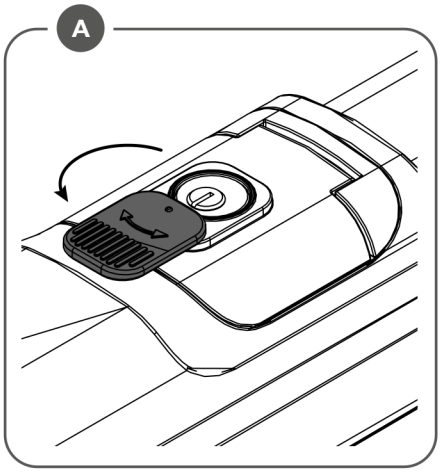

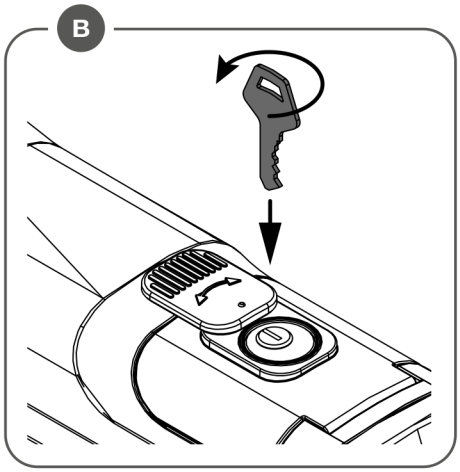

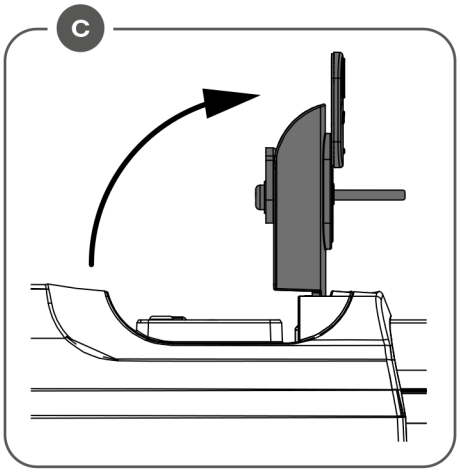

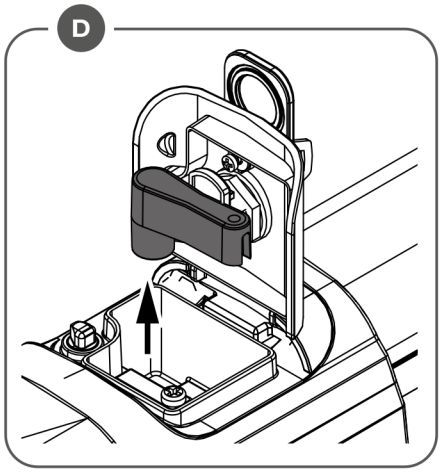

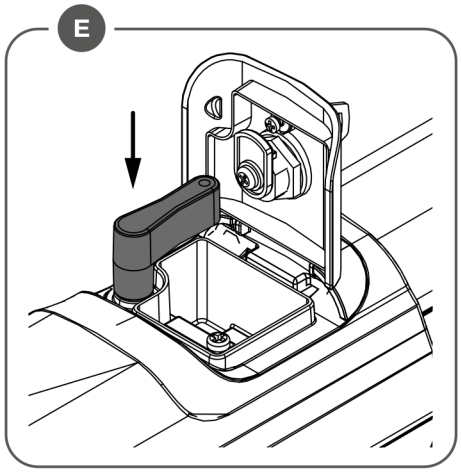

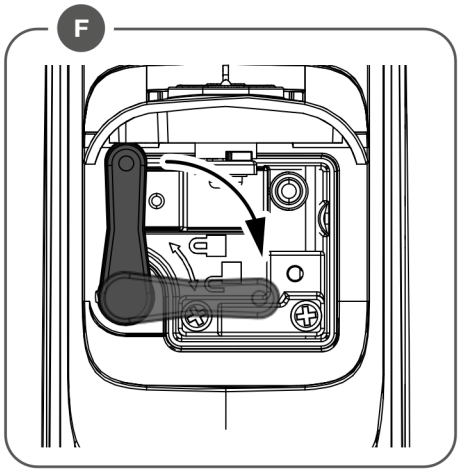

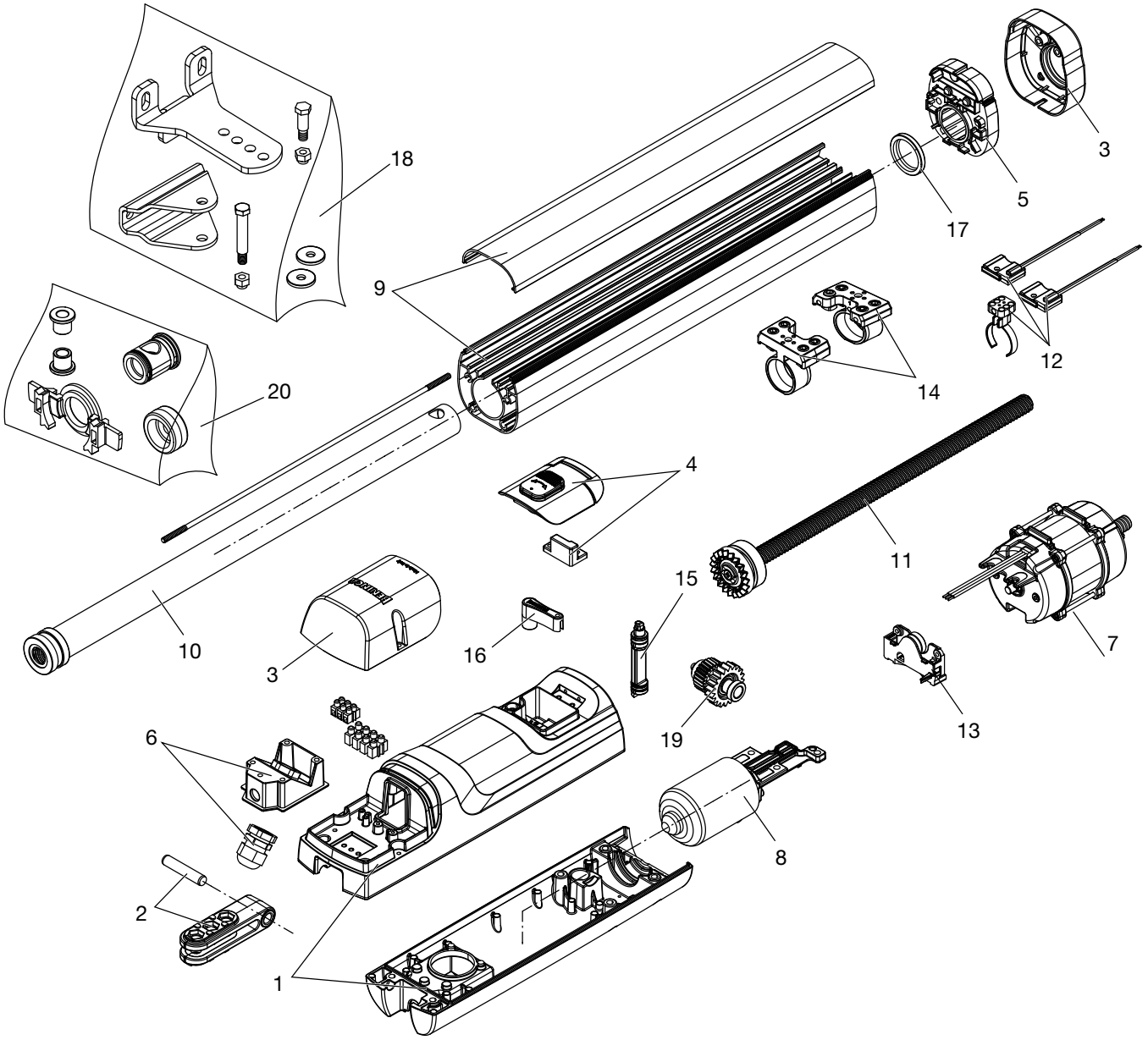

N.	TOM.30M	TOM.30ME	TOM.40M	TOM.50M	TOM.3024E	TOM.4024E	TOM.5024E	NOTE
1	968602913	968602913	968602913	968602913	968602913	968602913	968602913	
2	968602914	968602914	968602914	968602914	968602914	968602914	968602914	
3	968602915	968602915	968602915	968602915	968602915	968602915	968602915	
4	968602917	968602917	968602917	968602917	968602917	968602917	968602917	
5	968602918	968602918	968602918	968602918	968602918	968602918	968602918	
6	968602956	968602956	968602956	968602956	968602956	968602956	968602956	
7	968602931	968602931	968602931	968602931	-	-	-	
8	-	-	-	-	968602932	968602932	968602932	
9	968602933	968602933	-	-	968602933	-	-	
	-	-	968602934	-	-	968602934	-	
	-	-	-	968603395	-	-	968603395	
10	968602935	968602935	-	-	968602935	-	-	
	-	-	968602936	-	-	968602936	-	
	-	-	-	968603396	-	-	968603396	
11	968602937	968602937	-	-	968602937	-	-	
	-	-	968602938	-	-	968602938	-	
	-	-	-	968603397	-	-	968603397	
12	968602939	-	968603139	968603139	-	-	-	
13	-	9686701	-	-	-	-	-	
14	968602940	968602940	968602940	968602940	968602940	968602940	968602940	2 Pz
15	968602942	968602942	968602942	968602942	968602942	968602942	968602942	
16	968602650	968602650	968602650	968602650	968602650	968602650	968602650	2 Pz
17	968602943	968602943	968602943	968602943	968602943	968602943	968602943	5 Pz
18	968602944	968602944	968602944	968602944	968602944	968602944	968602944	
19	968602941	968602941	9686820	9686820	968602941	9686820	9686820	
20	968603825	968603825	968603825	968603825	968603825	968603825	968603825	